E01 Crank Case

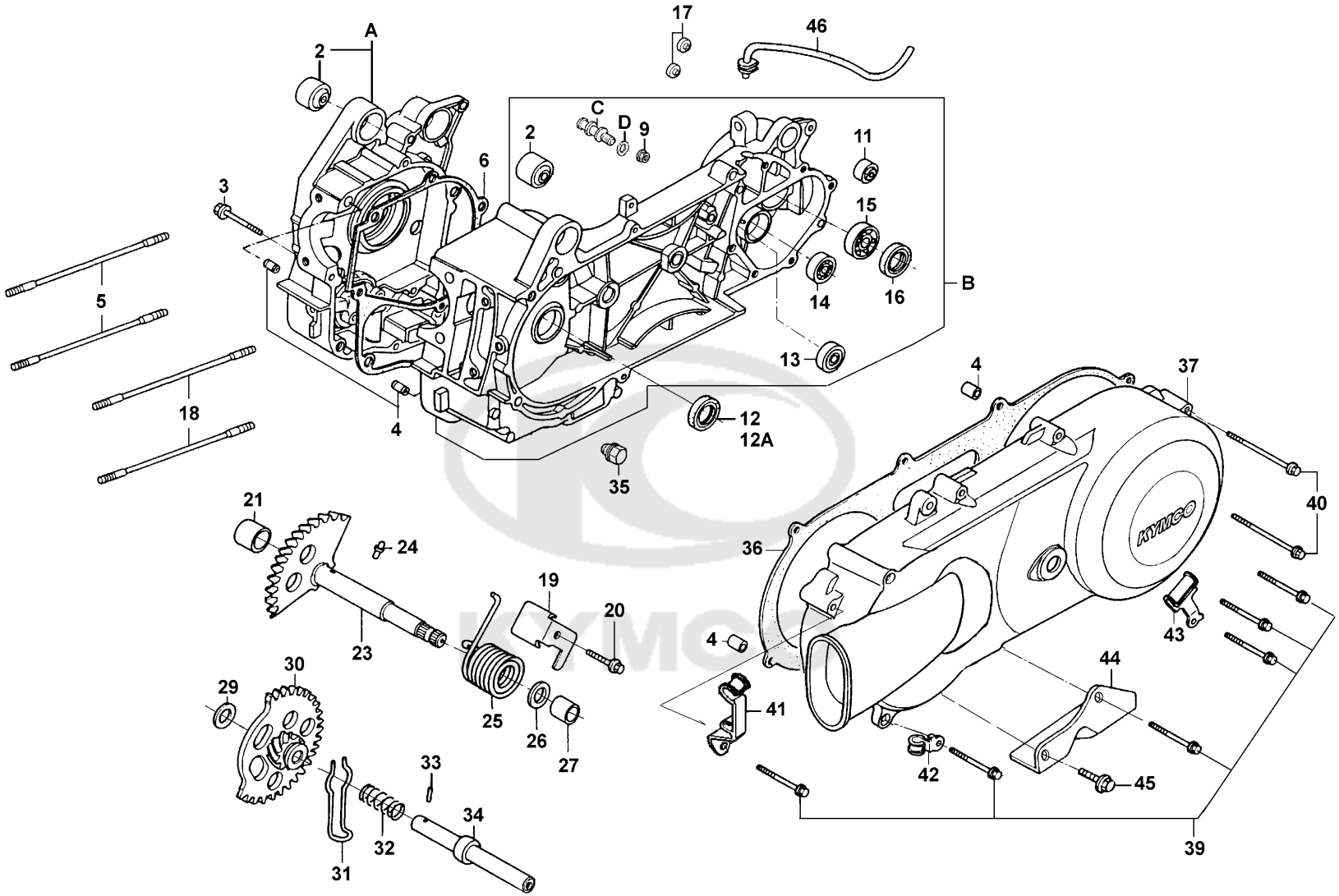

Sales mark	Ref no	Part no	Description	Reg description	Regd no
	A	11100-GFY6-306	CASE SET R CRANK	CASE SET R CRANK	1
	2	11102-1G87-004	RUB BUSH ENG HANGER	RUB BUSH ENG HANGER	2
	6	11192-GFY6-901	GASKET CRANK CASE A	GASKET CRANK CASE A	1
	B	11200-GFY6-306	CASE ASSY L CRANK	CASE ASSY L CRANK	1
	17	11202-GGC7-301	GUIDE RUBBER SPG	GUIDE RUBBER SPG	2
	11	11203-GGC7-301	UNDER RUBBER BUSH RR CUSHI0N	UNDER RUBBER BUSH RR CUSHI0N	1
	C	11203-KAM1-311	PIN BRAKE SHOE ANCHOR	PIN BRAKE SHOE ANCHOR	1
	19	11206-GFY6-901	PLATE KICK RETURN STOPPER	PLATE KICK RETURN STOPPER	1
	46	11221-GFY6-901	TUBE MISSION BREATHER	TUBE MISSION BREATHER	1
	37	11341-GFY6-922	COVER L	COVER L	1
	41	11381-GFY6-941	CLAMPER THROTTLE CABLE	CLAMPER THROTTLE CABLE	1
	43	11382-GFY6-901	CLAMPER BRAKE CABLE	CLAMPER BRAKE CABLE	1
	42	11383-GFY6-901	CLAMPER BRTH DRAIN TUBE	CLAMPER BRTH DRAIN TUBE	1
	36	11395-GFY6-921	GAKET L COVER	GAKET L COVER	1
	31	28223-KHG8-001	SPG FRICTION STARTER GEAR	SPG FRICTION STARTER GEAR	1
	30	28230-GFY6-200	GEAR COMP STARTER IDLE	GEAR COMP STARTER IDLE	1
	34	28241-GFY6-941	SHAFT IDLE START	SHAFT IDLE START	1
	32	28242-GGA7-001	SPRING STARTER IDLE	SPRING STARTER IDLE	1
	23	28250-GFY6-901	SPINDLE COMP KICK START	SPINDLE COMP KICK START	1
	21	28254-GGA7-005	BUSH 12*16*12	BUSH 12*16*12	1

Sales mark	Ref no	Part no	Description	Reg description	Regd no
	27	28254-KHG8-911	BUSH KICK SPDL 14*18*16	BUSH KICK SPDL 14*18*16	1
	25	28281-KHG8-902	SPG KICK STARTER	SPG KICK STARTER	1
	24	28282-GGA7-002	PIN SPECIAL 4 65mm	PIN SPECIAL 4 65mm	1
	44	50504-GFY6-900	STAY MAIN STAND STOPPER	STAY MAIN STAND STOPPER	1
	39	90001-GBHB-711	BOLT FLANGE SHF 6*40	BOLT FLANGE SHF 6*40	6
	40	90001-GBHB-761	BOLT FLANGE SHF 6*65 (B)	BOLT FLANGE SHF 6*65 (B)	2
	5	90031-GFY6-901	BOLT A STUD 8*187.5	BOLT A STUD 8*187.5	2
	18	90032-GFY6-901	BOLT B STUD 8*195.5	BOLT B STUD 8*195.5	2
	9	90309-KLF0-004-SY	NUT FLANGE 8MM	NUT FLANGE 8MM	1
	26	90451-1E55-001	WASHER 14MM	WASHER 14MM	1
	29	90452-KHG8-001	WASHER 12.5MM	WASHER 12.5MM	1
	35	9052A-GFY6-950	BOLT ASSY DRAIN PLUG	BOLT ASSY DRAIN PLUG	1
	13	91003-KDS4-004	BRG BALL RADIAL 6301TMB	BRG BALL RADIAL 6301TMB	1
	15	91009-GLE0-004	BRG BALL RADIAL 6004 UU	BRG BALL RADIAL 6004 UU	1
	12	91202-GFY6-90A	OIL SEAL 19.8*30*5	OIL SEAL 19.8*30*5	1
	12A	91202-GFY6-90B	OIL SEAL 19.8*30*5	OIL SEAL 19.8*30*5	1
	16	91255-GLE0-006	OIL SEAL 27*42*7	OIL SEAL 27*42*7	1
	D	91301-0C53-001	O RING 7.5*1.5	O RING 7.5*1.5	1
	4	94301-08140	PIN A DOWEL 8*14	PIN A DOWEL 8*14	4
	45	96001-06012-08	BOLT FLANGE SH 6*12	BOLT FLANGE SH 6*12	2

KYMCO

Sales mark	Ref no	Part no	Description	Reg description	Regd no
	20	96001-06014-08	BOLT FLANGE 6*14	BOLT FLANGE 6*14	1
	3	96001-06050-08	BOLT FLANGE SH 6*50	BOLT FLANGE SH 6*50	2
	14	96100-60020-00	BRG BALL RADIAL 6002	BRG BALL RADIAL 6002	1
	33	96220-GFY6-901	ROLLER 3*8.5	ROLLER 3*8.5	1

KYMCO

E02	Cylinder Head CoverCylinder Head

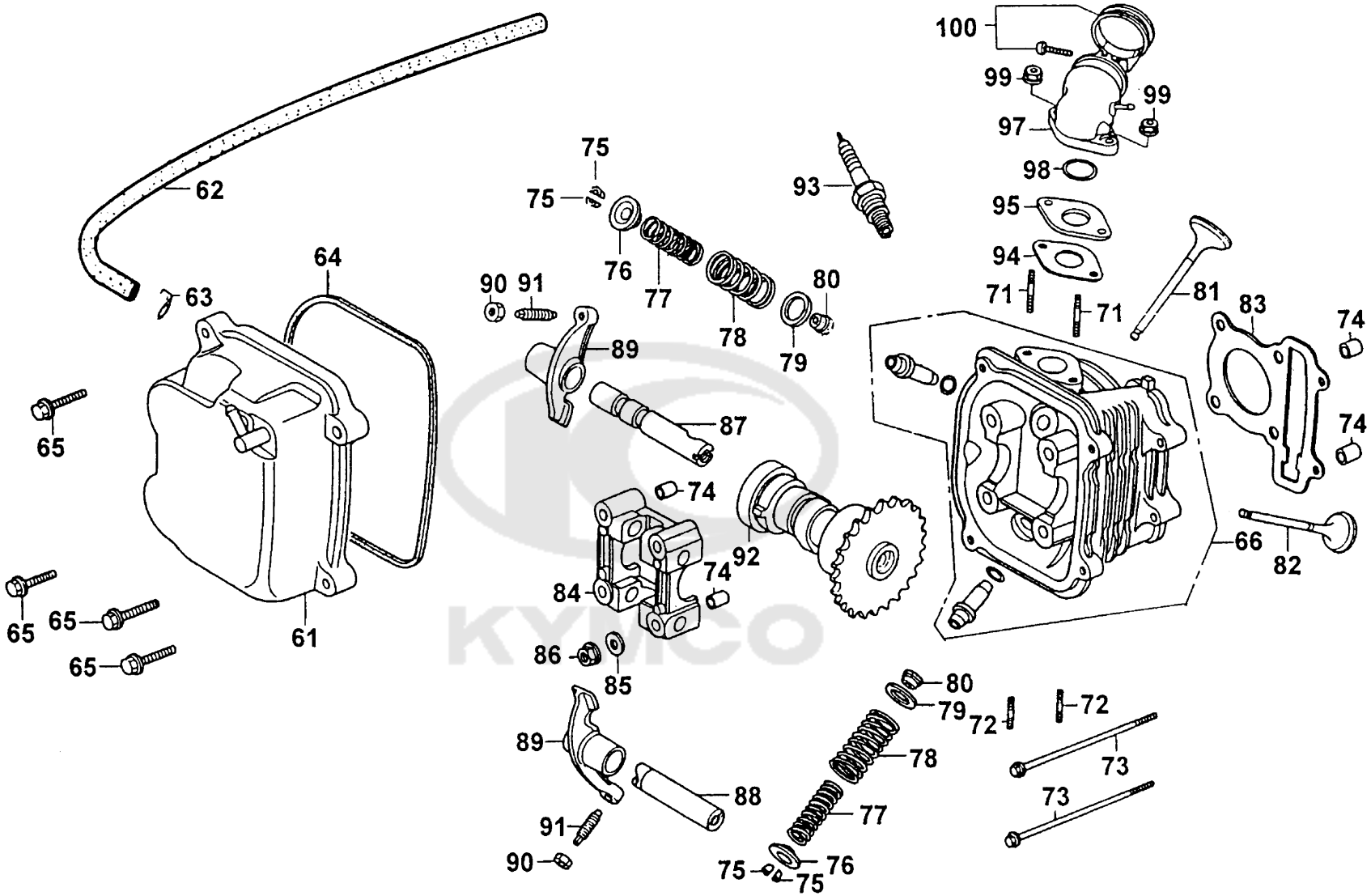

Sales mark	Ref no	Part no	Description	Reg description	Regd no
	62	11211-GFY6-901	TUBE BREATHER	TUBE BREATHER	1
	66	12200-GFY6-901	HEAD COMP CYLN	HEAD COMP CYLN	1
	80	12209-GDB4-68A	SEAL VALVE STEM	SEAL VALVE STEM	2
	84	12211-KUDU-900	HOLDER CAM SHAFT	HOLDER CAM SHAFT	1
	83	12251-GFY6-90A	GASKET CYLINDER HEAD	GASKET CYLINDER HEAD	1
	61	12310-GFY6-901	COVER COMP HEAD	COVER COMP HEAD	1
	64	12391-GFY6-901	GASKET HEAD COVER	GASKET HEAD COVER	1
	92	14100-GFY6-220	SHAFT COMP CAM	SHAFT COMP CAM	1
	89	14431-GFY6-901	ARM VALVE ROCKER	ARM VALVE ROCKER	2
	87	14450-GFY6-901	SHAFT COMP IN ROCKER ARM	SHAFT COMP IN ROCKER ARM	1
	88	14452-GFY6-901	SHAFT EXH ROCKER ARM	SHAFT EXH ROCKER ARM	1
	81	14711-GFY6-901	VALVE INLET	VALVE INLET	1
	82	14721-GFY6-901	VALVE EXHAUST	VALVE EXHAUST	1
	78	14751-GEN5-91A	SPRING VALVE OUTER	SPRING VALVE OUTER	2
	77	14761-GEN5-91A	SPRING VALVE INNER	SPRING VALVE INNER	2
	76	14771-GDB4-680	RETAINER VALVE SPRING	RETAINER VALVE SPRING	2
	79	14775-MFA6-001	SEAT VALVE SPG	SEAT VALVE SPG	2
	75	14781-MFA6-001	COTTER VALVE	COTTER VALVE	4
	94	16201-GFY6-901	GASKET CARB INSULATOR A	GASKET CARB INSULATOR A	1
	94	16201-GFY6-910	GASKET CARB INSULATOR A	GASKET CARB INSULATOR A	1

KYMCO

Sales mark	Ref no	Part no	Description	Reg description	Regd no
	95	16211-GFY6-901	INSULATOR CARB	INSULATOR CARB	1
	97	1711A-GFY6-900	PIPE ASSY INLET	PIPE ASSY INLET	1
	100	17256-GFY6-901	BAND INSULATOR	BAND INSULATOR	1
	91	90012-3C33-001	SCREW TAPPET ADJUSTING	SCREW TAPPET ADJUSTING	2
	72	90033-GFY6-900	BOLT STUD 8*32	BOLT STUD 8*32	2
	90	90206-0A01-001	NUT TAPPET ADJG	NUT TAPPET ADJG	2
	85	90465-MDC4-001	WASHER 8MM	WASHER 8MM	4
	98	91301-0H28-001	O RING 27*2	O RING 27*2	1
	71	92900-06050-0B	BOLT STUD 6*50	BOLT STUD 6*50	2
	99	94050-06080	NUT FLANGE 6MM	NUT FLANGE 6MM	2
	86	94050-08080	NUT FLANGE 8MM	NUT FLANGE 8MM	4
	74	94301-10160	DOWEL PIN 10*16	DOWEL PIN 10*16	4
	63	95002-02080	CLIP B8 CHAMBER TUBE	CLIP B8 CHAMBER TUBE	1
	65	96001-06025-08	BOLT FLANGE SH 6*25	BOLT FLANGE SH 6*25	4
	73	96001-06100-08	BOLT FLANGE SH 6*100	BOLT FLANGE SH 6*100	2
	93	98056-5771R-00	SPARK PLUG (CR7HSA)	SPARK PLUG (CR7HSA)	1

E03 CylinderPistonCrankshaft

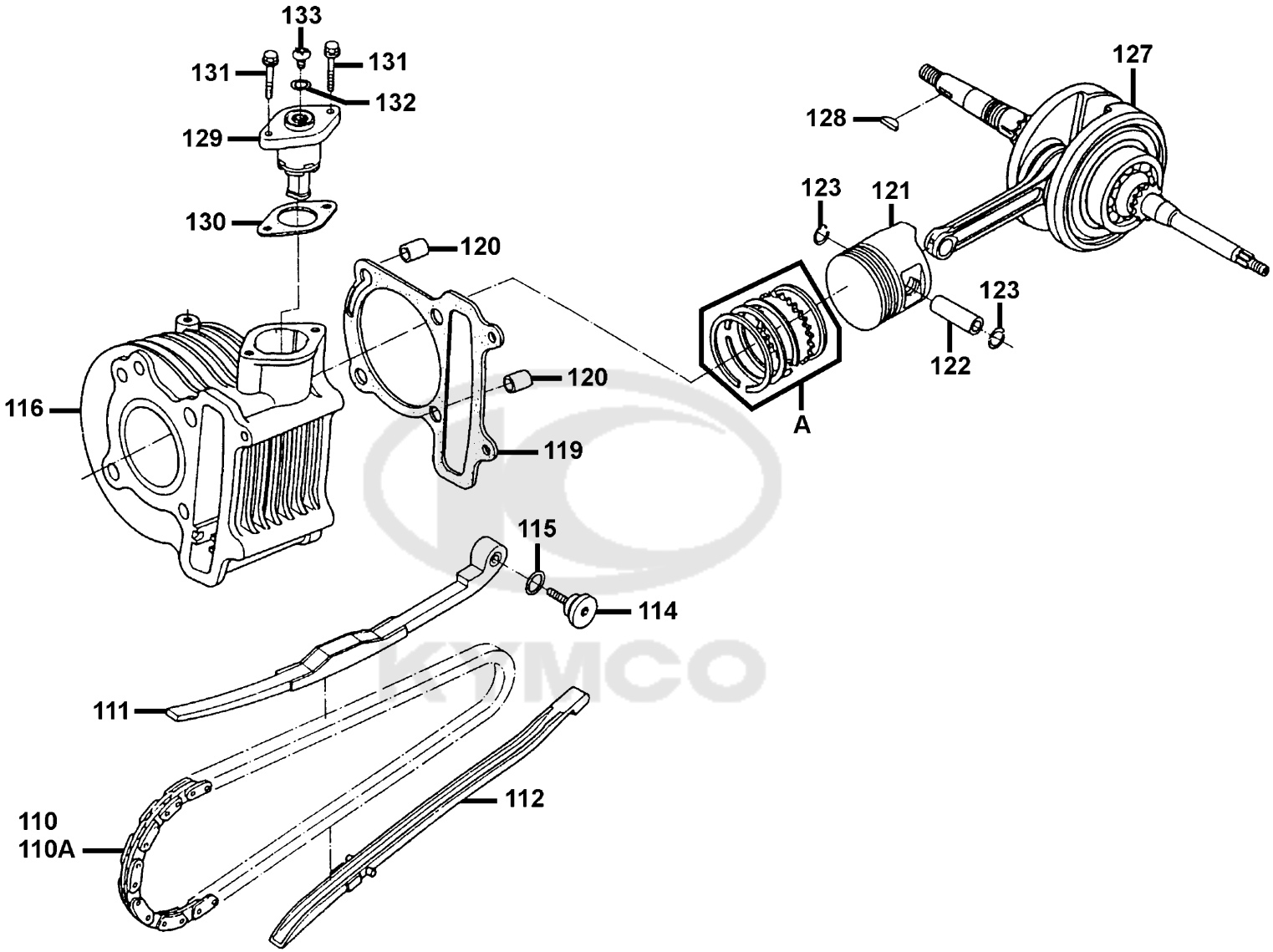

Sales mark	Ref no	Part no	Description	Reg description	Regd no
	116	12100-GFY6-901	CYLINDER COMP	CYLINDER COMP	1
	119	12191-GFY6-901	GASKET CYLINDER A	GASKET CYLINDER A	1
	127	13000-GFY6-920	CRANK SHAFT COMP	CRANK SHAFT COMP	1
	A	13011-GFY6-900	RING SET PISTON	RING SET PISTON	1
	121	13101-GFY6-941	PISTON	PISTON	1
	122	13111-3D84-001	PIN PISTON	PIN PISTON	1
	110	14401-GFY6-90A	CHAIN CAM	CHAIN CAM	1
	110A	14401-GFY6-90C	CHAIN CAM	CHAIN CAM	1
	111	14510-GFY6-901	TENSIONER CAM CHAIN	TENSIONER CAM CHAIN	1
	129	14520-GFY6-90A	LIFTER ASSY TENSIONER	LIFTER ASSY TENSIONER	1
	130	14523-GFY6-901	GASKET TENSIONER LIFTER @A	GASKET TENSIONER LIFTER @A	1
	114	14531-GLR0-001	PIVOT CAM CHAIN TENSIONER	PIVOT CAM CHAIN TENSIONER	1
	112	14610-GFY6-901	GUIDE COMP CAM CHAIN	GUIDE COMP CAM CHAIN	1
	131	90001-GBHB-661	BOLT FLANGE SHF 6*22 (B)	BOLT FLANGE SHF 6*22 (B)	2
	133	90005-KAW1-901	SCREW PAN 6*6	SCREW PAN 6*6	1
	128	90701-HFB6-011	KEY WOODRUFF 25*14*4	KEY WOODRUFF 25*14*4	1
	115	91301-GLR0-005	O-RING 15.2*1.5	O-RING 15.2*1.5	1
	132	91306-1E05-691	O-RING 1.5*9.5	O-RING 1.5*9.5	1
	120	94301-10160	DOWEL PIN 10*16	DOWEL PIN 10*16	2
	123	94601-15000	CLIP PISTON PIN 15MM	CLIP PISTON PIN 15MM	2

E04	Right Crankcase Cover

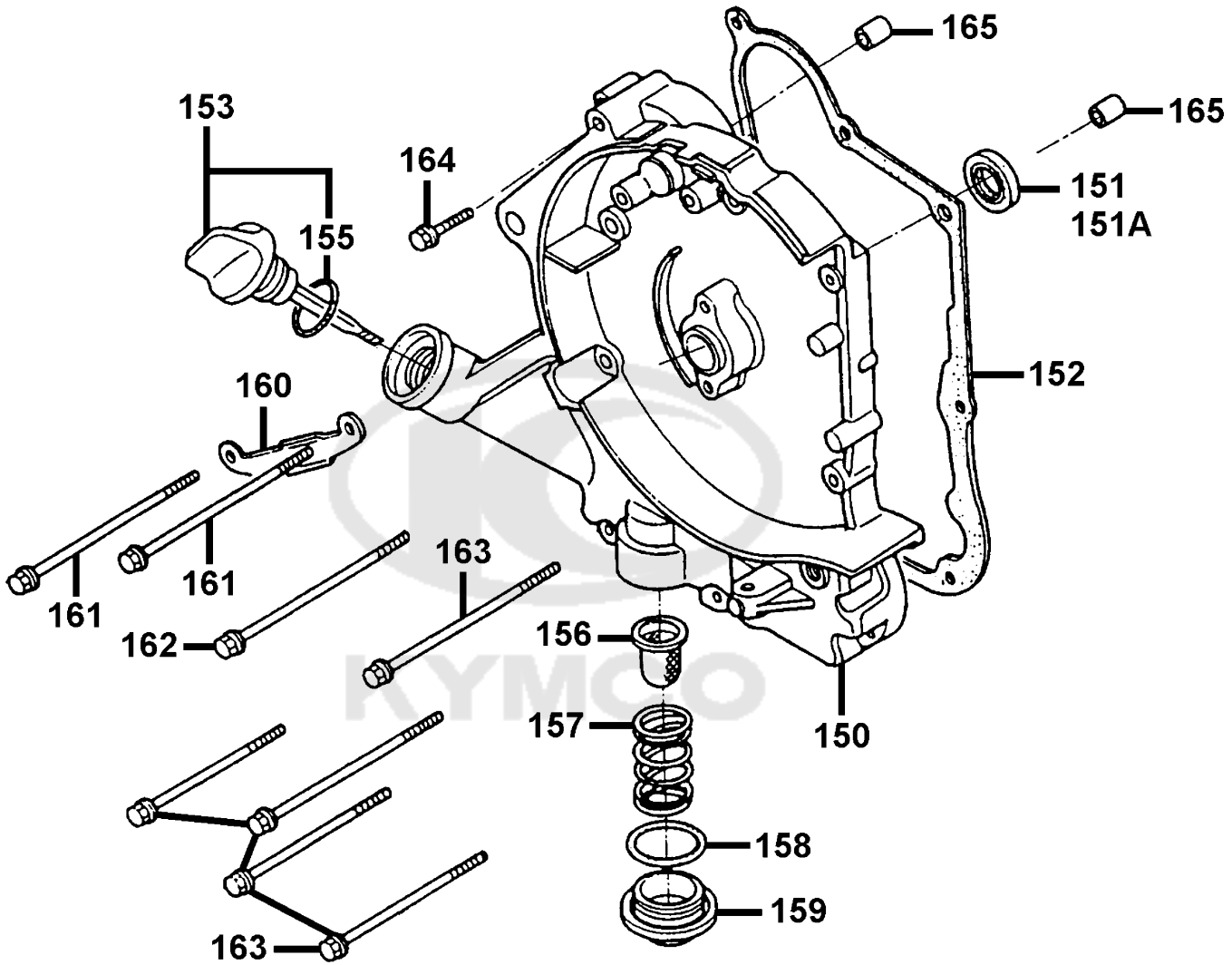

Sales mark	Ref no	Part no	Description	Reg description	Regd no
	150	11331-GFY6-200	COVER R CRANK CASE	COVER R CRANK CASE	1
	152	11394-GFY6-200	GASKET R COVERA	GASKET R COVERA	1
	159	12361-GFY6-901	HOLE CAP TAPPET ADJUSTING	HOLE CAP TAPPET ADJUSTING	1
	156	15421-1G07-001	SCREEN OIL FILTER	SCREEN OIL FILTER	1
	157	15426-GAE1-921	SPG OIL FILTER SCREEN	SPG OIL FILTER SCREEN	1
	153	1565A-GFY6-900	GAUGE OIL LEVEL ASSY	GAUGE OIL LEVEL ASSY	1
	160	32961-GFY6-901	CLAMPER ACG CORD	CLAMPER ACG CORD	1
	151	91202-GFY6-90A	OIL SEAL 19.8*30*5	OIL SEAL 19.8*30*5	1
	151A	91202-GFY6-90B	OIL SEAL 19.8*30*5	OIL SEAL 19.8*30*5	1
	158	91302-0A01-021	O-RING 30.8MM	O-RING 30.8MM	1
	155	91307-0E35-001	O RING 18*3	O RING 18*3	1
	165	94301-08140	PIN A DOWEL 8*14	PIN A DOWEL 8*14	2
	164	96001-06040-08	BOLT FLANGE SH 6*40	BOLT FLANGE SH 6*40	1
	163	96001-06095-08	BOLT FLANGE SH 6*95	BOLT FLANGE SH 6*95	4
	162	96001-06100-08	BOLT FLANGE SH 6*100	BOLT FLANGE SH 6*100	1
	161	96001-06110-08	BOLT FLANGE SH 6*110	BOLT FLANGE SH 6*110	2

KYMCO

E05	Transmission

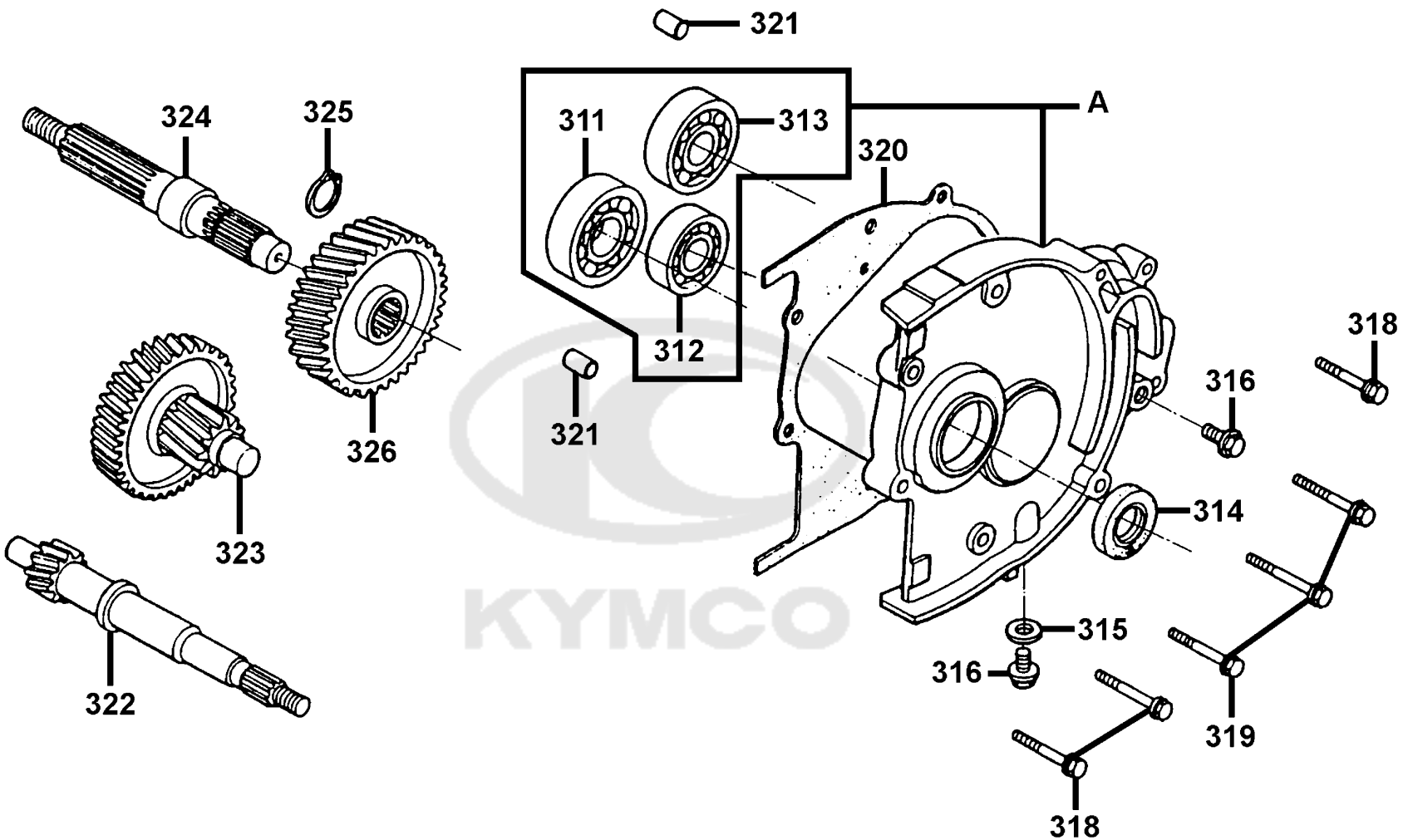

Sales mark	Ref no	Part no	Description	Reg description	Regd no
	A	21301-GFY6-306	COVER SET MISSION	COVER SET MISSION	1
	320	21395-GFY6-901	GASKET MISSION COVER	GASKET MISSION COVER	1
	322	23411-GFY6-901	SHAFT DRIVE	SHAFT DRIVE	1
	323	23420-GFY6-901	SHAFT COMP COUNTER	SHAFT COMP COUNTER	1
	324	23431-GFY6-921	SHAFT FINAL	SHAFT FINAL	1
	326	23432-GFY6-901	GEAR FINAL 40T	GEAR FINAL 40T	1
	315	90474-3C33-001	WASHER 8MM	WASHER 8MM	1
	311	91104-KGN7-671	BRG BALL RADIAL 6204	BRG BALL RADIAL 6204	1
	314	91202-KKJ9-004	OIL SEAL 20*32*6	OIL SEAL 20*32*6	1
	321	94301-08140	PIN A DOWEL 8*14	PIN A DOWEL 8*14	2
	325	94510-20000	CIR CLIP EXTERNAL 20	CIR CLIP EXTERNAL 20	1
	316	95701-08012-08	BOLT FLANGE 8X12	BOLT FLANGE 8X12	2
	318	96001-06028-08	BOLT FLANGE SH 6*28	BOLT FLANGE SH 6*28	3
	319	96001-06035-08	BOLT FLANGE 6*35	BOLT FLANGE 6*35	3
	312	96100-62020-00	BRG BALL RADIAL 6202	BRG BALL RADIAL 6202	1
	313	96100-62030-00	BRG BALL 6203	BRG BALL 6203	1

KYMCO

E06 Driven Pulley

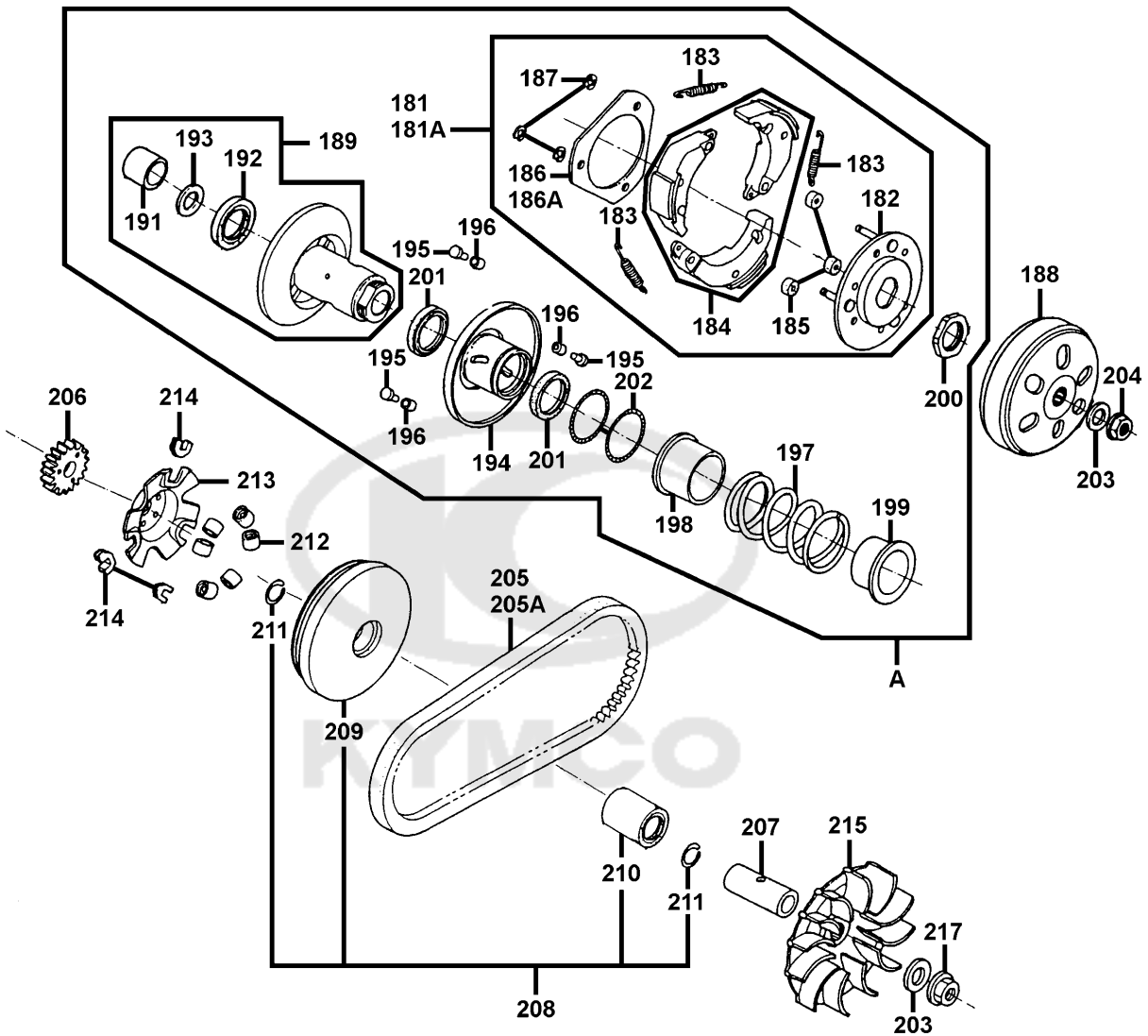

Sales mark	Ref no	Part no	Description	Reg description	Regd no
	188	22101-GFY6-941	CLUTCH OUTER	CLUTCH OUTER	1
	215	22102-GFY6-901	FACE DRIVE	FACE DRIVE	1
	207	22105-GFY6-220	BOSS DRIVE FACE	BOSS DRIVE FACE	1
	208	22110-KUDU-220	FACE COMP MOVABLE DRIVE	FACE COMP MOVABLE DRIVE	1
	209	22111-KUDU-220	FACE MOVABLE DRIVE	FACE MOVABLE DRIVE	1
	210	22112-GFY6-90A	BUSH 24*28*30	BUSH 24*28*30	1
	212	22121-GFY6-92A	ROLLER COMP WEIGHT	ROLLER COMP WEIGHT	6
	213	22131-GFY6-901	PLATE RAMP	PLATE RAMP	1
	214	22132-KBN2-901	PIECE SLIDE	PIECE SLIDE	3
	181A	22300-LHJ3-900	PLATE ASSY DRIVE	PLATE ASSY DRIVE	2
	182	22350-GFY6-90A	PLATE COMP DRIVE	PLATE COMP DRIVE	1
	182	22350-LHJ3-900	PLATE COMP DRIVE	PLATE COMP DRIVE	1
	186	22361-GFY6-902	PLATE CLUTCH SIDE	PLATE CLUTCH SIDE	1
	186A	22361-KGN7-671	PLATE CLUTCH SIDE	PLATE CLUTCH SIDE	1
	186A	22361-LHJ3-900	PLATE CLUTCH SIDE	PLATE CLUTCH SIDE	1
	183	22401-GFY6-90A	SPRING CLUTCH	SPRING CLUTCH	3
	183	22401-LHJ3-900	SPRING CLUTCH	SPRING CLUTCH	3
	184	22530-LHJ3-900	WEIGHT CLUTCH	WEIGHT CLUTCH	3
	185	22804-GBB2-001	RUBBER CLUTCH DUMRER	RUBBER CLUTCH DUMRER	3
	A	2301A-KFA9-900	PULLEY SUB ASSY	PULLEY SUB ASSY	1

Sales mark	Ref no	Part no	Description	Reg description	Regd no
	205	23100-GFY6-90A	BELT DRIVE	BELT DRIVE	1
	205A	23100-GFY6-90B	BELT DRIVE	BELT DRIVE	1
	189	23200-GFY6-901	FACE ASSY DRIVEN	FACE ASSY DRIVEN	1
	194	23220-GFY6-921	MOVABLE DRIVEN FACE COMP	MOVABLE DRIVEN FACE COMP	1
	195	23225-GHC8-004	PIN ROLLER GUIDE	PIN ROLLER GUIDE	3
	196	23226-GHC8-004	ROLLER GUIDE	ROLLER GUIDE	3
	197	23233-GCW3-011	DRIVEN FACE SPRING	DRIVEN FACE SPRING	1
	198	23237-GFY6-941	COLLAR SEAL	COLLAR SEAL	1
	199	23238-GFY6-941	COLLAR SPRING	COLLAR SPRING	1
	206	28221-GFY6-200	GEAR KICK STARTER DRIVE	GEAR KICK STARTER DRIVE	1
	204	90201-PHB8-001	NUT COMPRESSOR FLANGE 12MM	NUT COMPRESSOR FLANGE 12MM	1
	200	90202-1G87-001	NUT SPECIAL 28MM	NUT SPECIAL 28MM	1
	203	90441-GFY6-941	WASHER 12. 2*29*2.5	WASHER 12. 2*29*2.5	2
	211	90601-GFY6-901	CLIP 28MM	CLIP 28MM	2
	187	90605-1F66-721	CIR CLIP 7MM	CIR CLIP 7MM	3
	191	91001-GFY6-90A	BRG NDL 20*29*18	BRG NDL 20*29*18	1
	192	91002-GGA7-70A	BRG BALL RADIAL 6902U 15*28*7	BRG BALL RADIAL 6902U 15*28*7	1
	201	91211-KGN7-67A	SEAL DRIVEN FACE 34*41*4	SEAL DRIVEN FACE 34*41*4	2
	202	91351-6B42-000	O-RING PINION CAP	O-RING PINION CAP	2
	217	94050-12080	NUT FLANGE 12MM	NUT FLANGE 12MM	1

Sales mark	Ref no	Part no	Description	Reg description	Regd no
	193	94520-28000	CIR CLIP IN 28MM	CIR CLIP IN 28MM	1

E07 Starting MotorOil Pump

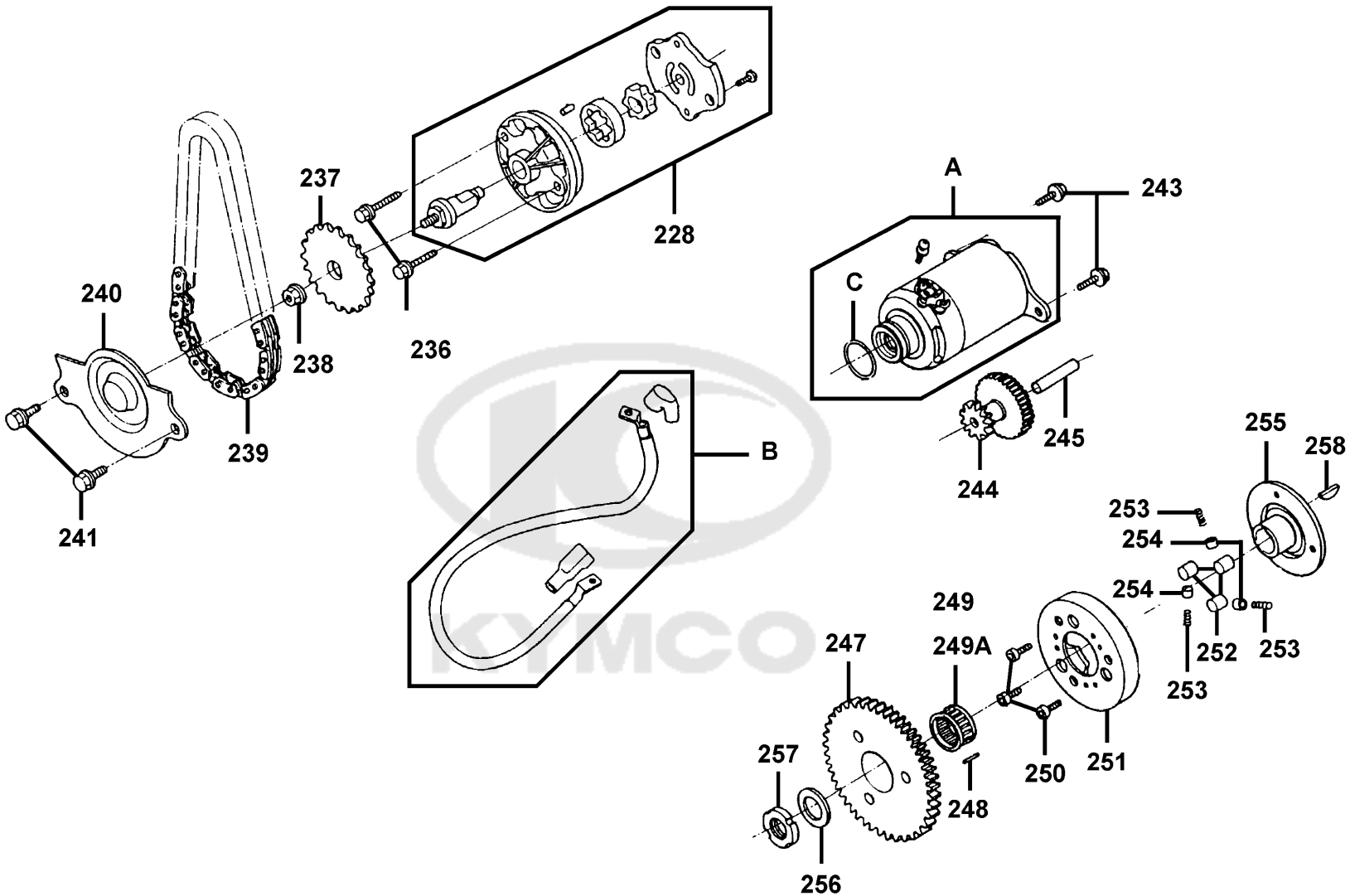

Sales mark	Ref no	Part no	Description	Reg description	Regd no
	228	15100-GFY6-901	PUMP ASSY OIL	PUMP ASSY OIL	1
	237	15133-GFY6-901	SPROCKET OIL PUMP DRIVEN	SPROCKET OIL PUMP DRIVEN	1
	239	15141-GFY6-90B	CHAIN OIL PUMP	CHAIN OIL PUMP	1
	239	15141-GFY6-90C	CHAIN OIL PUMP	CHAIN OIL PUMP	1
	240	15711-GFY6-901	SEPARATER OIL	SEPARATER OIL	1
	244	28101-GFY6-200	GEAR STARTER REDUCTION	GEAR STARTER REDUCTION	1
	245	28102-GFY6-901	SHAFT START REDUCTION GEAR	SHAFT START REDUCTION GEAR	1
	247	28110-GFY6-200	GEAR COMP STARTING CLUTCH	GEAR COMP STARTING CLUTCH	1
	251	28120-GFY6-315	OUTER COMP STARTING CLUTCH	OUTER COMP STARTING CLUTCH	1
	253	28125-4F26-001	SPRING ROLLER STARTER CLUTCH	SPRING ROLLER STARTER CLUTCH	3
	255	28125-GFY6-960	FLANGE STARTING CLUTCH	FLANGE STARTING CLUTCH	1
	254	28126-KUDU-900	CAP STARTING ROLLER SPRING	CAP STARTING ROLLER SPRING	3
	A	31210-GFY6-200	MOTOR UNIT START	MOTOR UNIT START	1
	A	31210-GFY6-20C	MOTOR UNIT START	MOTOR UNIT START	1
	B	32410-GFY6-901	CABLE START MOTOR	CABLE START MOTOR	1
	257	90201-GFY6-901	NUT LOCK 22MM	NUT LOCK 22MM	1
	256	90403-GFY6-901	WASHER THRUST 22.2*31*2.5	WASHER THRUST 22.2*31*2.5	1
	258	90701-HFB6-011	KEY WOODRUFF 25*14*4	KEY WOODRUFF 25*14*4	1
	252	91101-1K79-711	ROLLER 10*10	ROLLER 10*10	3
	249	91104-GFY6-90C-B	BRG NEEDLE 28*32*17	BRG NEEDLE 28*32*17	1

Sales mark	Ref no	Part no	Description	Reg description	Regd no
	249A	91104-GFY6-90C-R	BRG NEEDLE 28*32*17	BRG NEEDLE 28*32*17	1
	C	91309-4E25-004	O-RING 24.4*3.1	O-RING 24.4*3.1	1
	238	94050-06080	NUT FLANGE 6MM	NUT FLANGE 6MM	1
	241	96001-06012-08	BOLT FLANGE SH 6*12	BOLT FLANGE SH 6*12	2
	243	96001-06016-08	BOLT FLANGE SH 6*16	BOLT FLANGE SH 6*16	2
	236	96001-06025-08	BOLT FLANGE SH 6*25	BOLT FLANGE SH 6*25	2
	248	96220-60100	ROLLER 6*10	ROLLER 6*10	1
	250	96600-08010-10	SOCKET BOLT 8*10	SOCKET BOLT 8*10	3

KYMCO

E08 Fan coverGenerator

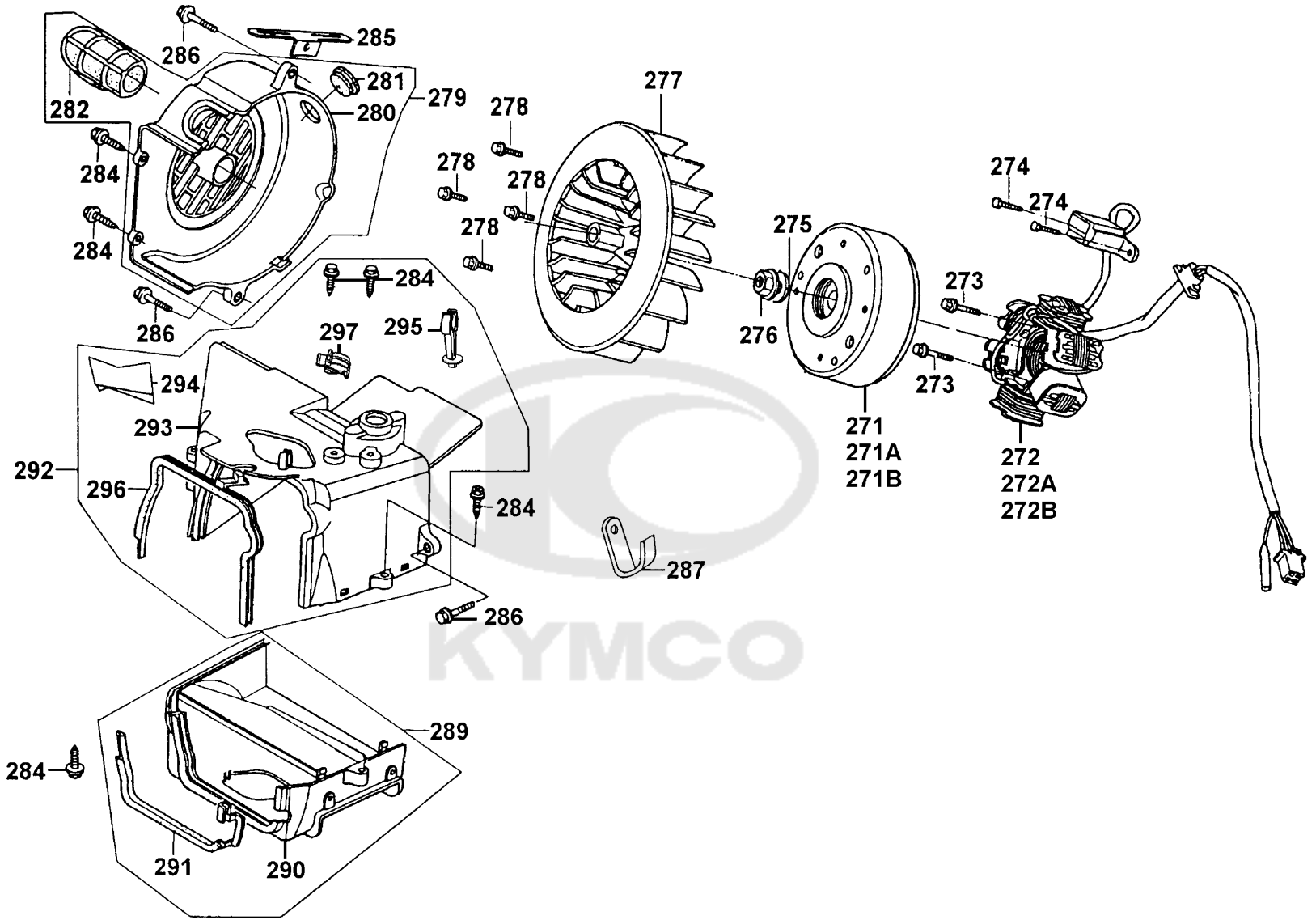

Sales mark	Ref no	Part no	Description	Reg description	Regd no
	287	11385-GFY6-901	CLAMPER CARB DRAIN TUBE	CLAMPER CARB DRAIN TUBE	1
	297	11386-GFY6-900	CLIP VACUUM TUBE	CLIP VACUUM TUBE	1
	277	19510-GFY6-901	FAN COMP COOLING	FAN COMP COOLING	1
	280	19610-GFY6-910	COVER COMP FAN	COVER COMP FAN	1
	285	19613-GFY6-901	CLAMPER STARTER	CLAMPER STARTER	1
	282	19615-GFY6-901	DUCT CARB COOLING	DUCT CARB COOLING	1
	279	1961A-GFY6-901	COVER ASSY FAN	COVER ASSY FAN	1
	290	19621-GFY6-902	SHROUD A	SHROUD A	1
	291	19625-GFY6-901	SEAL SHROUD A	SEAL SHROUD A	1
	289	1962A-GFY6-902	SHROUD ASSY	SHROUD ASSY	1
	293	19630-GFY6-901	SHROUD COMP B	SHROUD COMP B	1
	295	19632-GFY6-901	CLIP HIGHTENSION CORD	CLIP HIGHTENSION CORD	1
	294	19633-GFY6-901	GROMMET SHROUD B	GROMMET SHROUD B	1
	296	19635-GFY6-941	SEAL SHROUD B	SEAL SHROUD B	1
	292	1963A-GFY6-901	SHROUD B	SHROUD B	1
	271	31110-GFY6-901	FLY WHEEL COMP /D402	FLY WHEEL COMP /D402	1
	271A	31110-GFY6-90A	FLY WHEEL COMP /D402	FLY WHEEL COMP /D402	1
	271B	31110-GFY6-90C	FLY WHEEL COMP /D406	FLY WHEEL COMP /D406	1
	272	31120-GFY6-901	STATOR COMP /D402	STATOR COMP /D402	1
	272A	31120-GFY6-90A	STATOR COMP /D406	STATOR COMP /D406	1

KYMCO

Sales mark	Ref no	Part no	Description	Reg description	Regd no
	272B	31120-GFY6-90C	STATOR COMP /D414	STATOR COMP /D414	1
	281	70529-6G57-671	GROM B SIDE PNL	GROM B SIDE PNL	1
	275	90440-1F66-001	WASHER PLAIN 12MM	WASHER PLAIN 12MM	1
	274	92101-05012-0H	BOLT HEX 5*12	BOLT HEX 5*12	2
	284	93904-35360	SCREW TAPPING 5*16	SCREW TAPPING 5*16	6
	276	94001-12280-0S	NUT HEX 12MM	NUT HEX 12MM	1
	278	96001-06018-08	BOLT FLANGE SH 6*18	BOLT FLANGE SH 6*18	4
	273	96001-06020-08	BOLT FLANGE SH 6*20	BOLT FLANGE SH 6*20	2
	286	96001-06025-08	BOLT FLANGE SH 6*25	BOLT FLANGE SH 6*25	3

KYMCO

E09	Carburetor

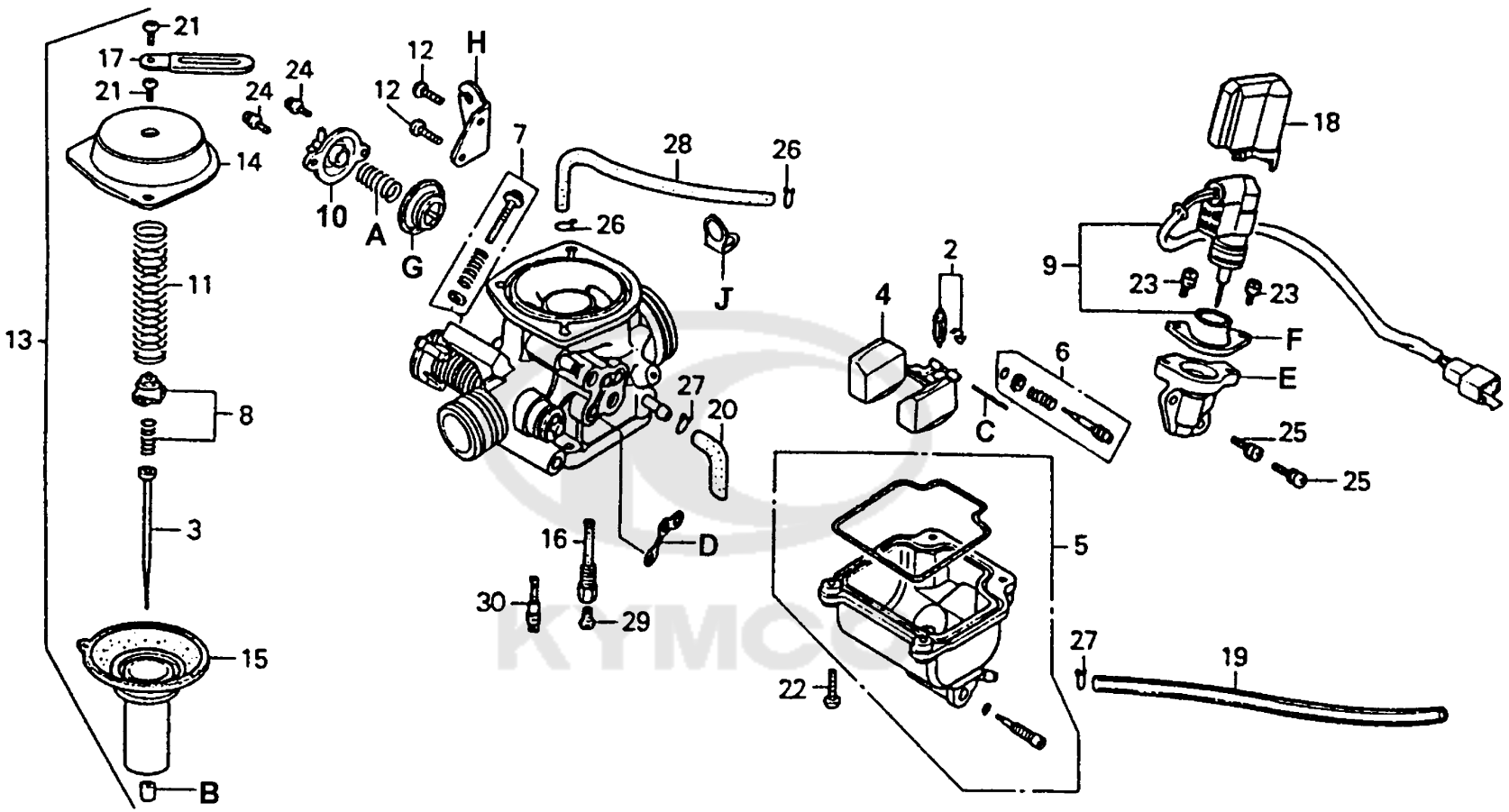

Sales mark	Ref no	Part no	Description	Reg description	Regd no
	30	1001-MA1H-0351	SLOW JET	SLOW JET	1
	G	120A-106H-9900	DIAPHRAGM COMP	DIAPHRAGM COMP	1
	J	1531-814-2000	BINDER	BINDER	1
	11	16050-GY6-9400	SPG COMP R	SPG COMP R	1
	12	16080-KJ9-0031-3	SCREW PAN	SCREW PAN	2
	14	16107-KJ9-0030	TOP SET	TOP SET	1
	13	1610K-KECE-C00	CARBURETOR ASSY	CARBURETOR ASSY	1
	15	16111-GY6-9000	VACUUM PISTON COMP	VACUUM PISTON COMP	1
	17	16179-KAB-6700	BINDER	BINDER	1
	F	1703-GJ2H-0040	SET PLATE	SET PLATE	1
	18	1738-GJ2H-0040	HOLDER CAP	HOLDER CAP	1
	9	4000-050-0000	AUTO BYSTARTER SET	AUTO BYSTARTER SET	1
	21	93500-04008-1H-3	SCREW PAN	SCREW PAN	2
	22	93500-04014-1H-3	SCREW PAN	SCREW PAN	4
	23	93892-04008-18	SCREW WASHER 4*8	SCREW WASHER 4*8	2
	24	93892-04010-18-3	SCREW WASHER	SCREW WASHER	2
	25	93892-05012-18	WASHER SCREW	WASHER SCREW	2
	26	95002-02070	CLIP B7 PORT TUBE	CLIP B7 PORT TUBE	2
	27	95002-02080	CLIP B8 CHAMBER TUBE	CLIP B8 CHAMBER TUBE	2
	29	99101-393-1100	MAIN JET (#110)	MAIN JET (#110)	1

KYMCO

Sales mark	Ref no	Part no	Description	Reg description	Regd no
	4	D1310-853-0110	FLOAT COMP	FLOAT COMP	1
	5	K350-KBF-0200	FLOAT CHAMBER SET	FLOAT CHAMBER SET	1
	16	N413-34B00	NEEDLE JET HOLDER	NEEDLE JET HOLDER	1
	2	S362-0080	FLOAT VALVE SET	FLOAT VALVE SET	1
	6	S446-1210	SCREW SET	SCREW SET	1
	8	S506-0052	VALVE PLATE SET	VALVE PLATE SET	1
	7	S5360-143-A000	SCVREW SET(S.S)	SCVREW SET(S.S)	1
	20	S7860-110-B000	TUBE SET(A.V)	TUBE SET(A.V)	1
	19	S7860-112-B000	TUBE SET	TUBE SET	1
	28	S7860-136-B000	TUBE SET	TUBE SET	1
	E	W1202-001-9900	BY-ST BODY COMP	BY-ST BODY COMP	1
	C	W1314-014-9901	ARM PIN	ARM PIN	1
	3	W1425-GY6-9410	JET NEEDLE COMP	JET NEEDLE COMP	1
	10	W1476-138-9902	DIAPHRAGM COVER	DIAPHRAGM COVER	1
	H	W1561-231-9900	WIRE STAY	WIRE STAY	1
	A	W1711-B19-9900	SPG COMP R	SPG COMP R	1
	D	W1787-142-9900	O-RING	O-RING	1
	B	W9554-26638	NEEDLE JET	NEEDLE JET	1

KYMCO

F01	Head Light

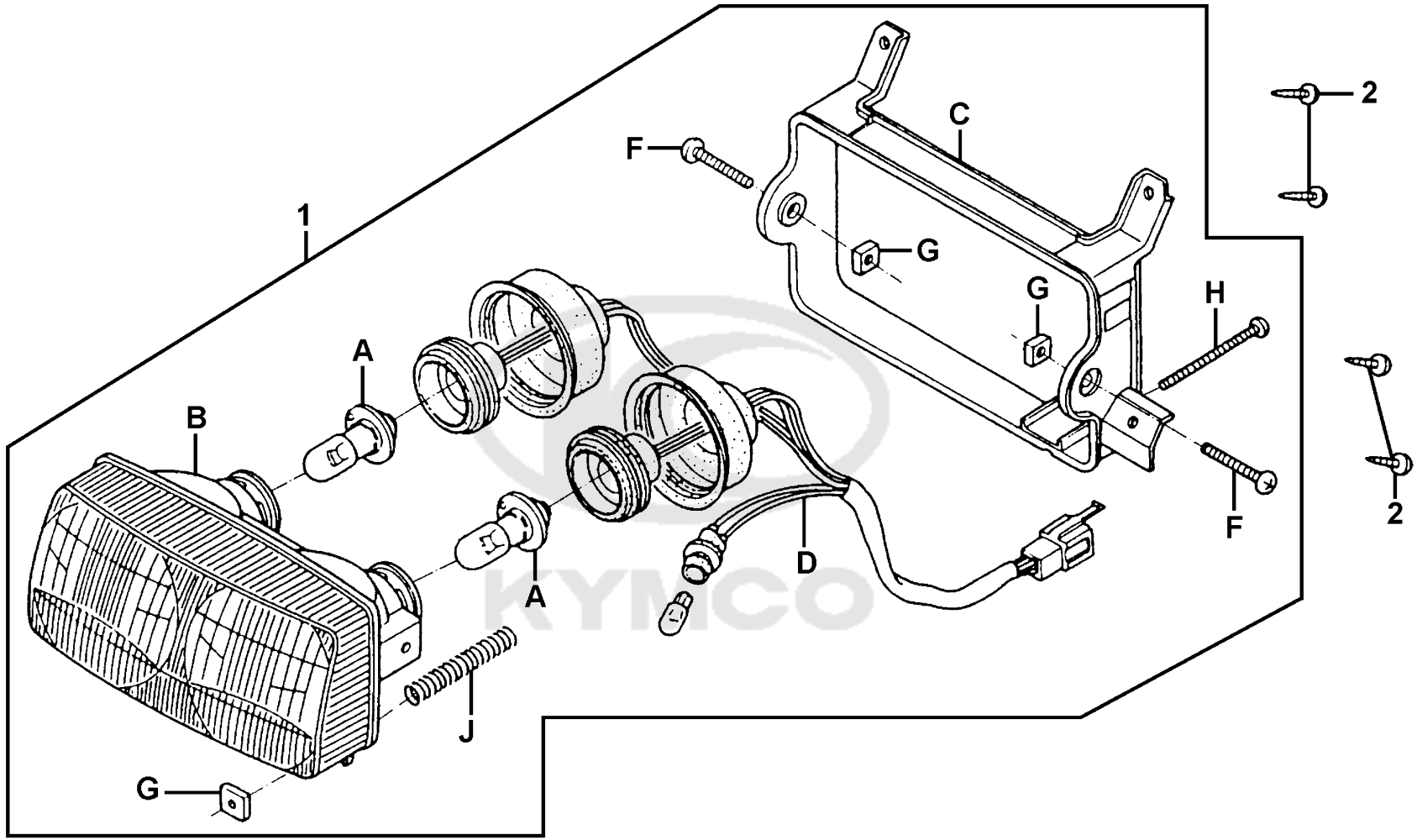

Sales mark	Ref no	Part no	Description	Reg description	Regd no
	1	33100-GFY6-911	HEAD LIGHT ASSY	HEAD LIGHT ASSY	1
	J	33109-KAM1-000	SPRING BEAM ADJUSTING	SPRING BEAM ADJUSTING	1
	B	33120-GFY6-910	UNIT HEAD LIGHT	UNIT HEAD LIGHT	1
	C	33121-GFY6-90A	STAY MOUNT	STAY MOUNT	1
	G	33128-GHE8-67A	NUT BEAM ADJUSTING	NUT BEAM ADJUSTING	3
	D	33130-GFY6-90A	SOCKET COMP	SOCKET COMP	1
	A	34901-KFC9-900	BULB HEAD LIGHT 12V18/18W	BULB HEAD LIGHT 12V18/18W	2
	H	90100-GFY6-90A	SCREW BEAM ADJUSTING	SCREW BEAM ADJUSTING	1
	F	90150-4C63-77A	SCREW PAN 5*10	SCREW PAN 5*10	2
	2	93903-45360	SCREW TAPPING 5*16	SCREW TAPPING 5*16	4

KYMCO

F02	Speedometer

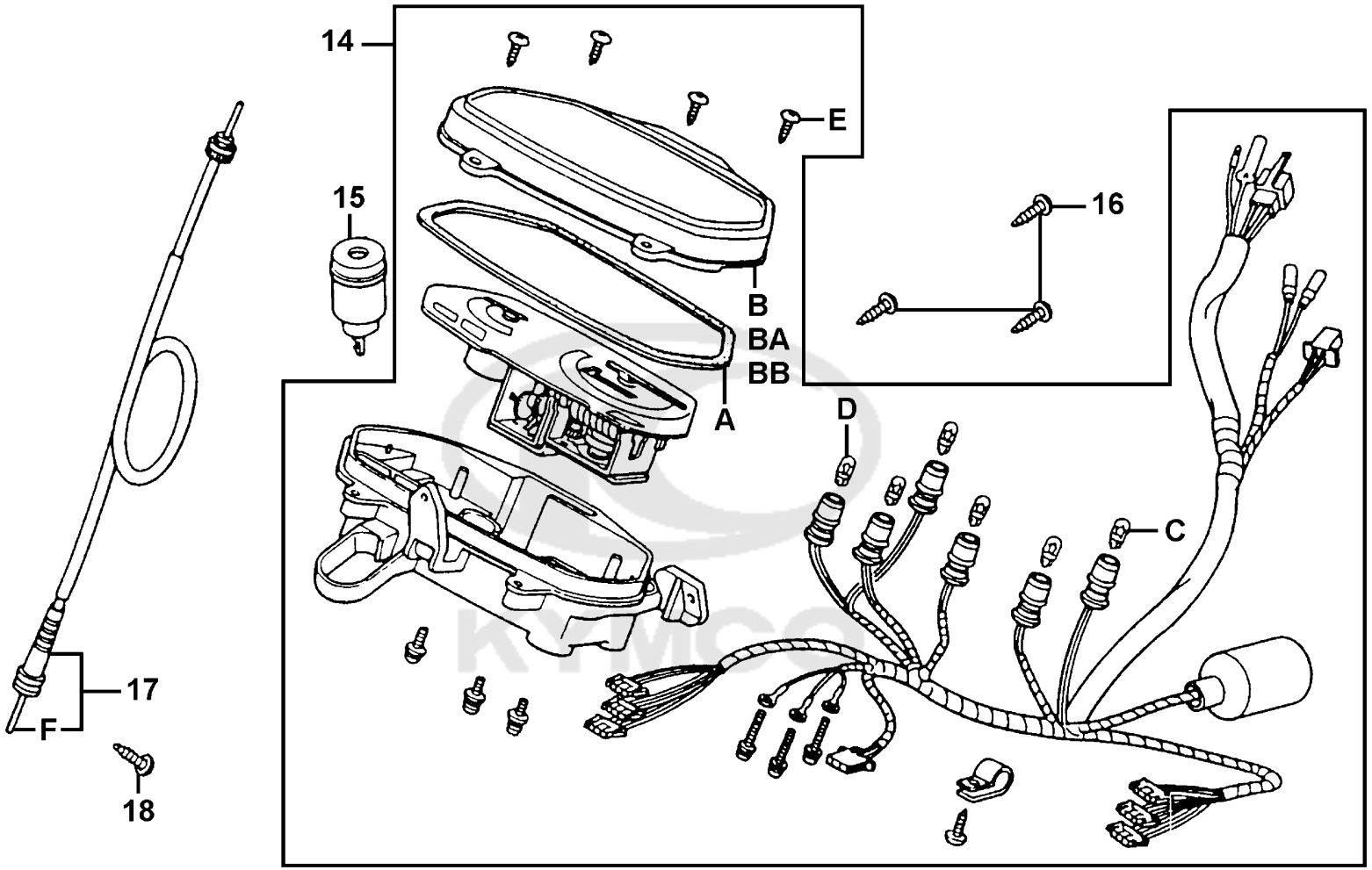

Sales mark	Ref no	Part no	Description	Reg description	Regd no
	D	34908-GGA7-70A	BULB WEDGE BASE 12V*3.4W	BULB WEDGE BASE 12V*3.4W	2
	C	34908-MKB9-87A	BULB WEDGE BASE 12V*1.7W	BULB WEDGE BASE 12V*1.7W	4
	B	37119-GFY6-90A	LENS	LENS	1
	BA	37119-GFY6-90B	LENS	LENS	1
	BB	37119-GFY6-90C	LENS	LENS	1
	14	37200-KFLF-901	SPEEDMETER ASSY	SPEEDMETER ASSY	1
	A	37302-GFY6-900	PLATE REFLECTING ASSY	PLATE REFLECTING ASSY	1
	15	38301-GGS7-005	RELAY COMP AP WINKER	RELAY COMP AP WINKER	1
	17	44830-GFY6-901	CABLE COMP SPDMT	CABLE COMP SPDMT	1
	F	44831-GFY6-900	CABLE INNER	CABLE INNER	1
	18	93700-05018-0H	SCREW OVAL 5*18	SCREW OVAL 5*18	1
	E	93903-24420	SCREW TAPPING 4*16	SCREW TAPPING 4*16	5
	16	93903-35320	SCREW TAPPING 5*16	SCREW TAPPING 5*16	3

KYMCO

F03 Handle SteeringHandle Cover

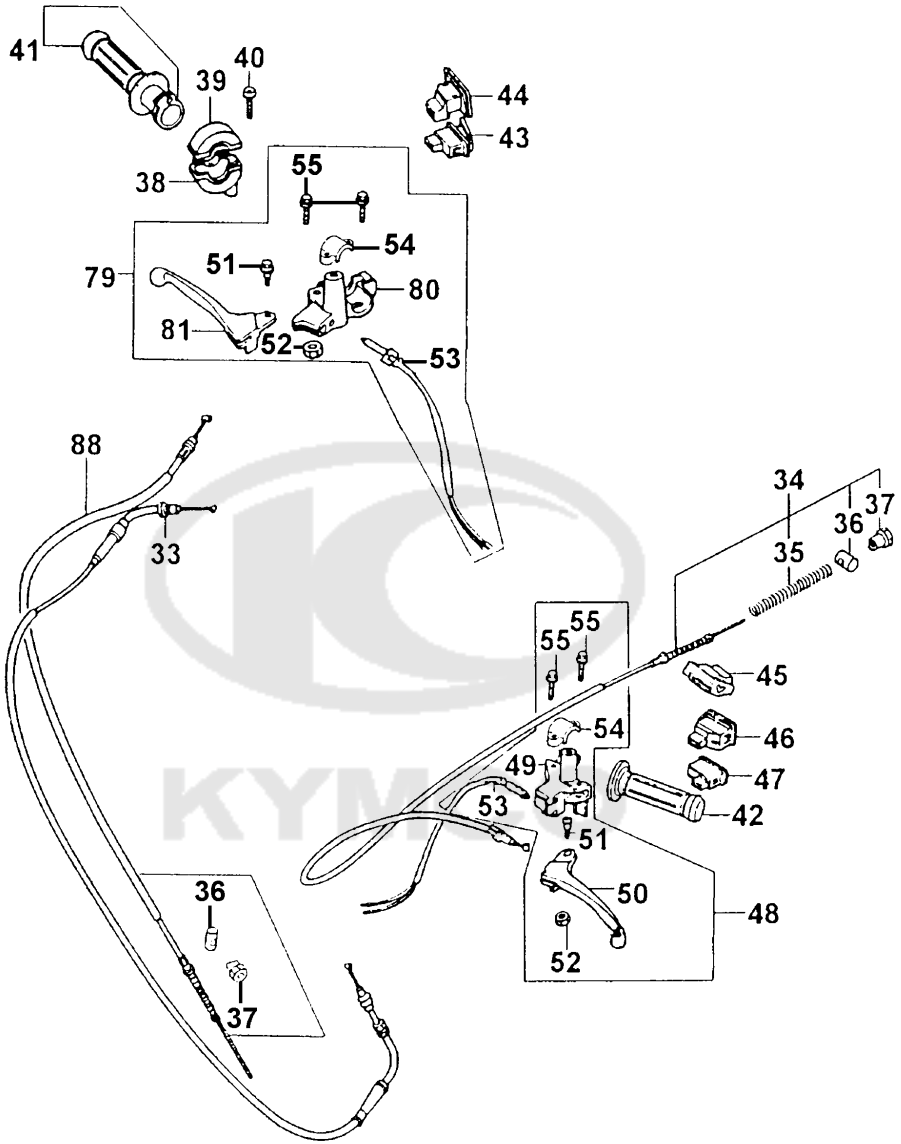

Sales mark	Ref no	Part no	Description	Reg description	Regd no
	33	17910-GFY6-901	CABLE COMP THROT	CABLE COMP THROT	1
	44	35150-GFY6-900	SW UNIT LIGHTING	SW UNIT LIGHTING	1
	43	35160-GFY6-900	SW UNIT START	SW UNIT START	1
	45	35170-KNBN-910	SW UNIT DIMMER	SW UNIT DIMMER	1
	47	35180-GFY6-900	SW UNIT HORN	SW UNIT HORN	1
	46	35200-GFY6-910	SW UNIT WINKER	SW UNIT WINKER	1
	53	35340-KFLF-900	SW ASSY FR STOP	SW ASSY FR STOP	2
	34	43450-GFY6-901	CABLE COMP RR BRK	CABLE COMP RR BRK	1
	35	43472-1A61-001	SPG RR BRK ARM	SPG RR BRK ARM	1
	88	4545A-GFY6-900	CABLE COMP FR BRK	CABLE COMP FR BRK	1
	54	45517-GFY6-900	HOLDER HNDL BRKT	HOLDER HNDL BRKT	2
**	41	53140-GFY6-960	GRIP COMP THORT	GRIP COMP THORT	1
**	42	53166-GBW2-001	GRIP L HANDLE	GRIP L HANDLE	1
	38	53167-GAR1-951	HOUSING UND THROT	HOUSING UND THROT	1
	39	53168-GAR1-951	HOUSING UP THROT	HOUSING UP THROT	1
	80	53170-GFY6-910	BRKT HANDLE R	BRKT HANDLE R	1
	49	53172-KFLF-900	BRKT HANDLE L	BRKT HANDLE L	1
**	81	53175-KCLC-901	LEVER R STRG HANDLE	LEVER R STRG HANDLE	1
**	50	53178-GKAK-901	LEVEL L STRG HANDLE	LEVEL L STRG HANDLE	1
	79	5317A-GFY6-910	LEVER ASS'Y R STRG HNDL	LEVER ASS'Y R STRG HNDL	1

Sales mark	Ref no	Part no	Description	Reg description	Regd no
	48	5317B-KFLF-900	BRACKET ASSY HANDLE L	BRACKET ASSY HANDLE L	1
	51	90115-GLE0-001	BOLT HNDL LEVER PIVOT	BOLT HNDL LEVER PIVOT	2
	40	93500-05022-06	SCREW PAN 5*22	SCREW PAN 5*22	1
	52	94001-05080-0S	NUT HEX 5MM	NUT HEX 5MM	2
	36	95015-32001	JOINT B BRAKE ARM	JOINT B BRAKE ARM	2
	37	95015-42000	NUT B ADJUST	NUT B ADJUST	2
	55	95701-06028-08	BOLT FLANGE 86*28	BOLT FLANGE 86*28	4

KYMCO

F04	CableHandle Lever

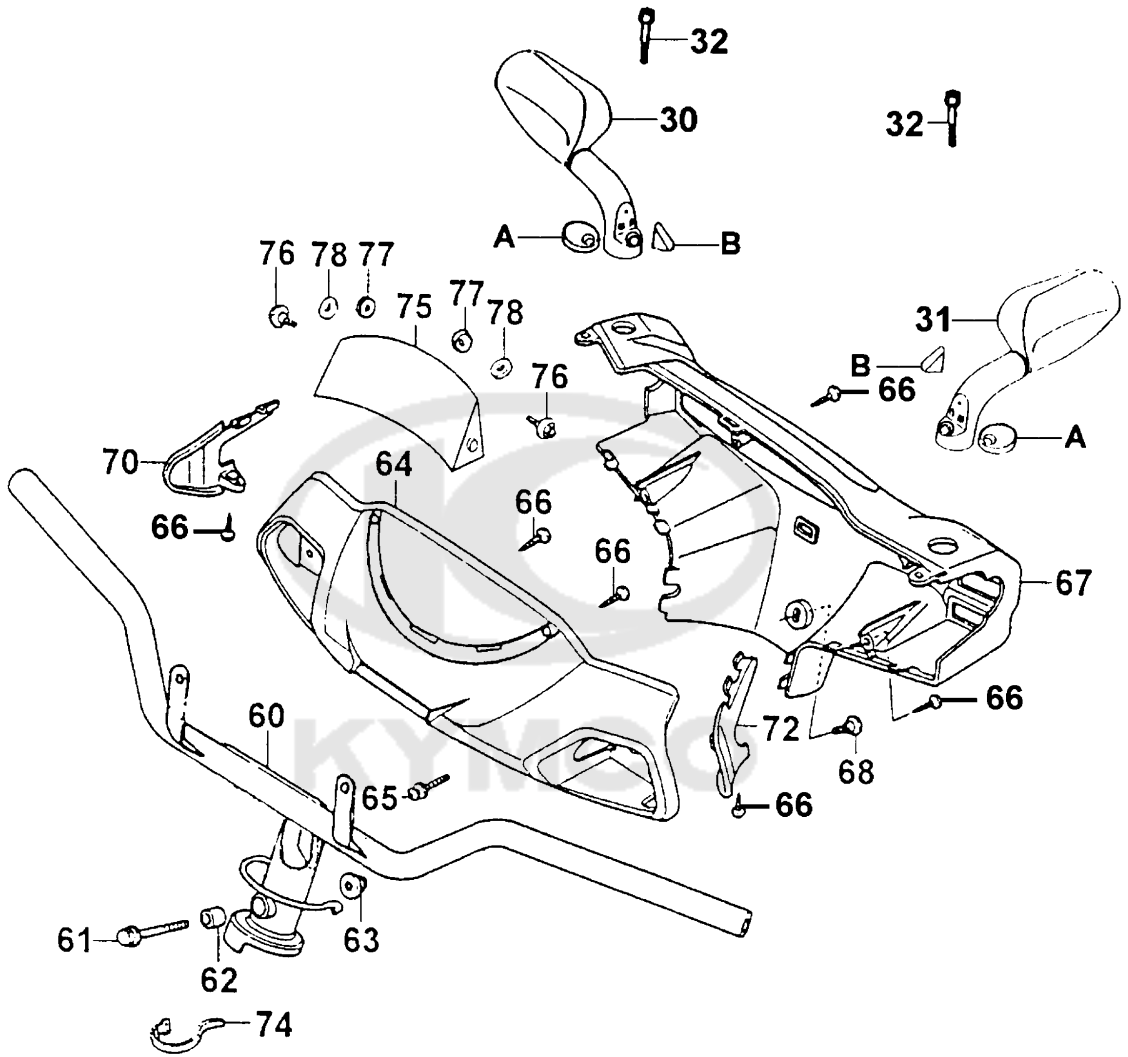

Sales mark	Ref no	Part no	Description	Reg description	Regd no
	60	53100-GFY6-911	HANDLE COMP STRG	HANDLE COMP STRG	1
	62	53125-GEN5-901	COLLAR HANDLE SET	COLLAR HANDLE SET	1
**	64	53205-KFLF-900	HANDLE FRONT COVER/plastic	HANDLE FRONT COVER/plastic	1
**	67	53206-GFY6-910	COVER HANDLE RR	COVER HANDLE RR	1
**	70	53207-KFLF-901	COVER R WINKER	COVER R WINKER	1
**	72	53217-KFLF-901	COVER L WINKER	COVER L WINKER	1
	76	64206-GDT4-001	PIN SCREEN SET	PIN SCREEN SET	2
	77	64206-MLJ0-001	NUT SPEED 4MM	NUT SPEED 4MM	2
	75	6421A-GFY6-C50	VISOR ASSY METER	VISOR ASSY METER	1
	30	88110-KFLF-800	MIRROR ASSY R BACK	MIRROR ASSY R BACK	1
	A	88116-KFLF-800	RUBBER	RUBBER	2
	B	88117-KFLF-901	CAP	CAP	2
	31	88120-KFLF-800	MIRROR ASSY L BACK	MIRROR ASSY L BACK	1
	61	90106-GEN5-901	BOLT FLANGE 10*50	BOLT FLANGE 10*50	1
	32	90185-KFLF-900	BOLT SOCKET 8*45	BOLT SOCKET 8*45	2
	68	90302-KNBN-900	BOLT PAN 5*10	BOLT PAN 5*10	1
	63	90304-GHE8-004	NUT U 10MM	NUT U 10MM	1
	78	90321-KGN7-911	WASHER EMBLEM	WASHER EMBLEM	2
	74	90656-KCBC-900	BAND OIL HANDLE	BAND OIL HANDLE	1
	65	93891-05035-06	SCREW WASHER 5*35	SCREW WASHER 5*35	1

Sales mark	Ref no	Part no	Description	Reg description	Regd no
	66	93903-34360	SCREW TAPPING 4*12	SCREW TAPPING 4*12	6

KYMCO

F05 Front CoverFront Fender

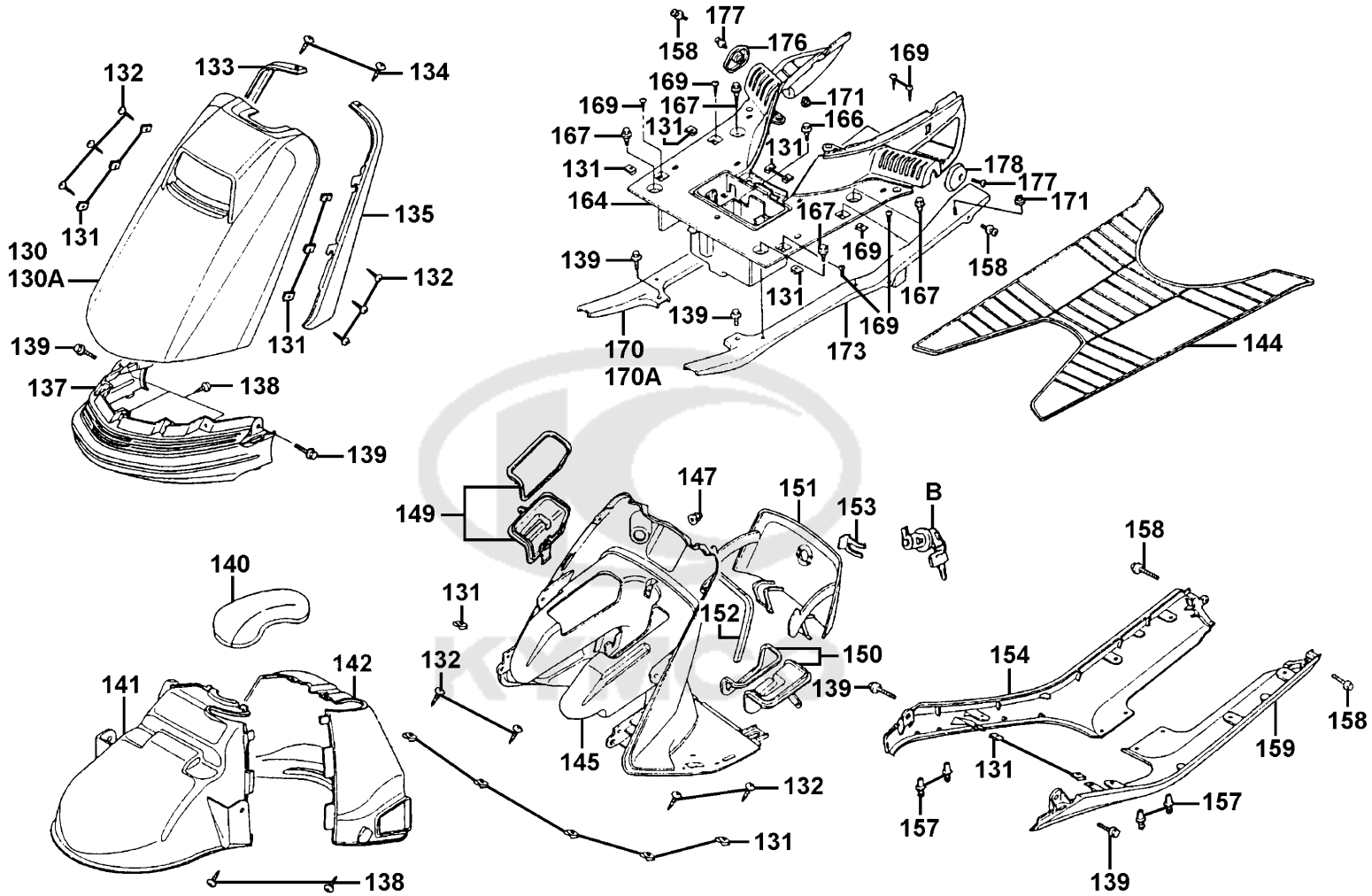

Sales mark	Ref no	Part no	Description	Reg description	Regd no
	140	17205-GFY6-902	ELEMENT FENDER FR	ELEMENT FENDER FR	1
**	170	50611-GFY6-901	RNFCT R FLOOR	RNFCT R FLOOR	1
**	170A	50611-GFY6-941	RNFCT R FLOOR	RNFCT R FLOOR	1
**	173	50612-GFY6-901	RNFCT L FLOOR	RNFCT L FLOOR	1
**	141	61100-GFY6-941	FRONT FENDER A	FRONT FENDER A	1
**	142	61101-GFY6-901	FENDER FRONT B	FENDER FRONT B	1
**	133	64218-GFY6-901	MOLDING FRONT R SIDE	MOLDING FRONT R SIDE	1
**	135	64219-GFY6-901	MOLDING FRONT L SIDE	MOLDING FRONT L SIDE	1
**	130A	64301-KFLF-315	COVER SET FRONT	COVER SET FRONT	1
**	137	64302-GFY6-901	MOLDING FRONT	MOLDING FRONT	1
**	145	64304-GFY6-941	LEG SHIELD	LEG SHIELD	1
**	154	64305-GFY6-901	SKIRT R SIDE	SKIRT R SIDE	1
**	159	64306-GFY6-901	SKIRT L SIDE	SKIRT L SIDE	1
**	151	64308-GFY6-901	LID INNER BOX	LID INNER BOX	1
**	164	64310-GFY6-941	FLOOR PANEL COMP	FLOOR PANEL COMP	1
**	176	64311-GFY6-901	END R PILLION STEP	END R PILLION STEP	1
**	178	64312-GFY6-901	END L PILLION STEP	END L PILLION STEP	1
**	149	6431A-GFY6-901	LID ASSY R BULB MAINT	LID ASSY R BULB MAINT	1
**	144	64320-GFY6-901	MAT FLOOR	MAT FLOOR	1
**	150	6432A-GFY6-901	LID ASSY L BULB MAINTE	LID ASSY L BULB MAINTE	1

Sales mark	Ref no	Part no	Description	Reg description	Regd no
	153	75581-6C73-001	SET SPG LOCK KEY	SET SPG LOCK KEY	1
	B	77233-GFY6-305	LOCK ASSY INNER BOX	LOCK ASSY INNER BOX	1
	152	81146-GBN2-001	SEAL RUBBER A	SEAL RUBBER A	1
	167	90111-1G47-001	BOLT FLANGE 6*17	BOLT FLANGE 6*17	4
	166	90111-1G87-001	BOLT FLANGE 6*14	BOLT FLANGE 6*14	1
	147	90301-6C93-001	NUT 6MM OPENSTAY	NUT 6MM OPENSTAY	1
	158	90302-GFY6-940	BOLT WASHER 5*16	BOLT WASHER 5*16	4
	131	90302-SDA4-004	NUT SPRING 4MM	NUT SPRING 4MM	20
	157	90683-GAR1-004	CLIP BODY COVER	CLIP BODY COVER	4
	177	93891-05025-06	SCREW WASH 5*25	SCREW WASH 5*25	2
	132	93903-14360	SCREW TAPPING 4*12	SCREW TAPPING 4*12	10
	138	93903-34360	SCREW TAPPING 4*12	SCREW TAPPING 4*12	5
	134	93903-44560	SCREW TAPPING 4*20	SCREW TAPPING 4*20	2
	169	93903-GFY6-900	SCREW TAPP 4*14	SCREW TAPP 4*14	6
	171	94050-06080	NUT FLANGE 6MM	NUT FLANGE 6MM	2
	139	95701-06012-08	BOLT FLANGE 6*12	BOLT FLANGE 6*12	6

KYMCO

F06 Front forkFront Cushion

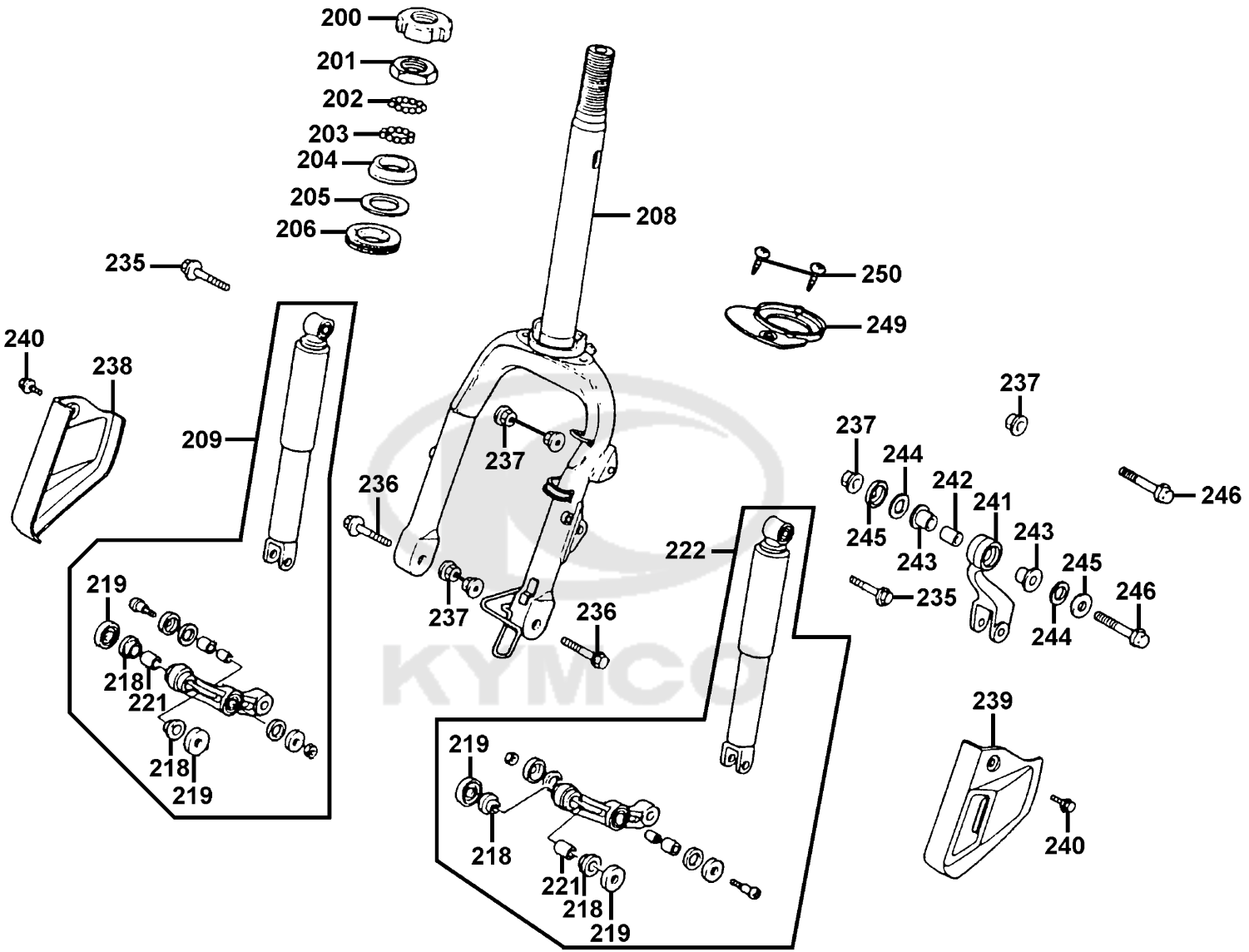

Sales mark	Ref no	Part no	Description	Reg description	Regd no
	241	45432-GFY6-901	TRQUE LINK FR BRK ASSY	TRQUE LINK FR BRK ASSY	1
	200	50306-1F96-001	NUT STRG STEM LOCK	NUT STRG STEM LOCK	1
	208	51105-GFY6-901	FORK COMP FR/2ND	FORK COMP FR/2ND	1
**	238	5110B-GFY6-901	COVER R PIVOT ARM	COVER R PIVOT ARM	1
**	239	5110C-GFY6-901	COVER L PIVOT ARM	COVER L PIVOT ARM	1
	219	51305-GKM9-004	DUST SEAT FR ARM	DUST SEAT FR ARM	4
	243	51312-GFY6-900	BUSH TRQUE LINK	BUSH TRQUE LINK	2
	218	51314-GKM9-71A	BUSH FR FORK UND	BUSH FR FORK UND	4
	221	51334-GKM9-001	COLLAR FR FORK DIST	COLLAR FR FORK DIST	2
	242	51334-KGV7-670	COLLAR TRQUE LINK (DISTANCE)	COLLAR TRQUE LINK (DISTANCE)	1
	244	51335-0A01-001	SEAL FR CUSH UNDER	SEAL FR CUSH UNDER	2
	245	51336-0A01-001	CAP FR CUSH UNDER DUST SEAL	CAP FR CUSH UNDER DUST SEAL	2
	209	51350-GFY6-901	ARM ASSY R	ARM ASSY R	1
	222	51450-GFY6-901	ARM ASSY L	ARM ASSY L	1
	201	53211-GFY6-940	RACE STRG TOP CONE	RACE STRG TOP CONE	1
	204	53212-2L50-011	RACE (STRG BOTTOM) CONE	RACE (STRG BOTTOM) CONE	1
	206	53214-2L50-001	DUST SEAL STRG	DUST SEAL STRG	1
	205	53215-2L50-001	WASHER STRG HEAD DUST	WASHER STRG HEAD DUST	1
	249	61105-GFY6-900	MAD GUARD FR	MAD GUARD FR	1
	236	90111-GCC3-001	BOLT FLANGE 8*48	BOLT FLANGE 8*48	2

Sales mark	Ref no	Part no	Description	Reg description	Regd no
	235	90118-4A71-001	BOLT FLANGE 8*37	BOLT FLANGE 8*37	2
	246	90118-GFY6-901	BOLT FLANGE 8*38(B)	BOLT FLANGE 8*38(B)	2
	237	90309-GLW0-90A	NUT U FLANGE 8MM	NUT U FLANGE 8MM	6
	240	90508-GHC8-000	BOLT FLANGE 5*9	BOLT FLANGE 5*9	2
	202	91014-LLJ3-E00	CAGE STEERING TOP #5	CAGE STEERING TOP #5	1
	203	91015-LLJ3-E00	CAGE STEERING BOT #8	CAGE STEERING BOT #8	1
	250	93903-25220	SCREW TAPPING 5*12	SCREW TAPPING 5*12	2

KYMCO

F07 Front Wheel

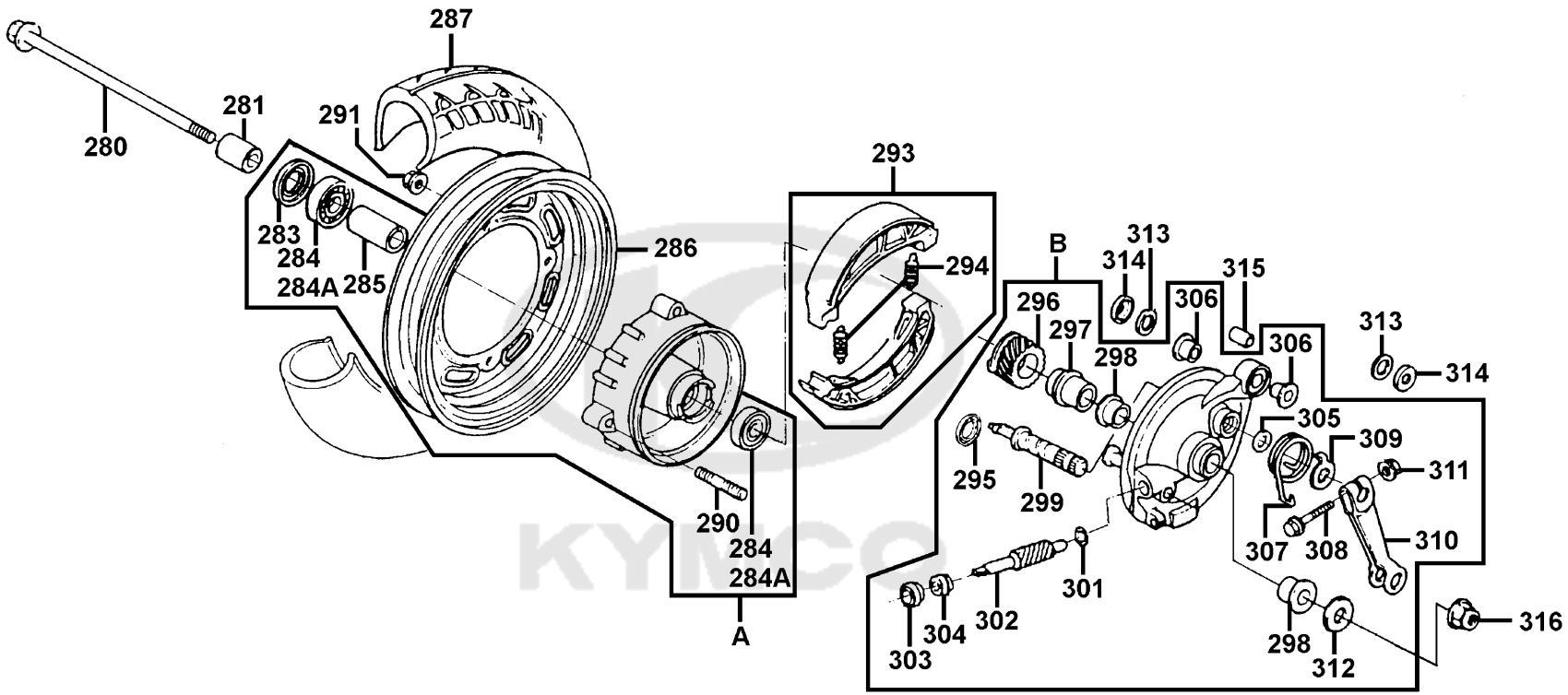

Sales mark	Ref no	Part no	Description	Reg description	Regd no
**	286	42705-GFY6-30A	RIM COMP WHEEL	RIM COMP WHEEL	1
**	286	42705-GFY6-30B	RIM COMP WHEEL	RIM COMP WHEEL	1
	287	42710-KFLF-90B	TIRE ASSY 350-10 /KENDA	TIRE ASSY 350-10 /KENDA	1
	293	4312A-KXCX-910	SHOE ASSY RR BRAKE	SHOE ASSY RR BRAKE	2
	299	43141-4L00-011	CAM FR REAR	CAM FR REAR	1
	280	44301-KHB4-900	AXLE FR WHEEL	AXLE FR WHEEL	1
	281	44311-GKM9-001	COLLAR FR WHEEL SIDE	COLLAR FR WHEEL SIDE	1
	297	44312-GKM9-001	COLLAR A FR BRAKE PANEL	COLLAR A FR BRAKE PANEL	1
**	A	44610-GLW0-305	HUB SUB ASSY FR	HUB SUB ASSY FR	1
	285	44620-GHC8-001	COLLAR FR AXLE DUST	COLLAR FR AXLE DUST	1
	304	44803-GFY6-90A	BUSH PINION	BUSH PINION	1
	296	44804-KGV7-67A	GEAR COMP SPDMT	GEAR COMP SPDMT	1
	302	44805-KGV7-672	PINION SPDMT	PINION SPDMT	1
	301	44807-0A01-004	WASHER GEAR BOX PINION	WASHER GEAR BOX PINION	1
**	B	45000-GFY6-305	PANEL SUB COMP FR BRK	PANEL SUB COMP FR BRK	1
	312	45104-GKM9-004	DUST SEAL CALIPER	DUST SEAL CALIPER	1
	298	45131-GFY6-900	BUSH FR BRAKE (CALIPER)	BUSH FR BRAKE (CALIPER)	2
	294	45133-0H28-001	SPRING BRAKE SHOE	SPRING BRAKE SHOE	2
	305	45134-2L50-001	DUST SEAL BRAKE CAM	DUST SEAL BRAKE CAM	1
	309	45145-KGB7-001	INDICATOR FR BRK	INDICATOR FR BRK	1

Sales mark	Ref no	Part no	Description	Reg description	Regd no
	310	45410-0H98-861	ARM ERONT BRAKE	ARM ERONT BRAKE	1
	307	45435-GKM9-001	SPG BRK ARM	SPG BRK ARM	1
	306	51312-GFY6-900	BUSH TRQUE LINK	BUSH TRQUE LINK	2
	315	51334-KGV7-670	COLLAR TRQUE LINK (DISTANCE)	COLLAR TRQUE LINK (DISTANCE)	1
	313	51335-0A01-001	SEAL FR CUSH UNDER	SEAL FR CUSH UNDER	2
	314	51336-0A01-001	CAP FR CUSH UNDER DUST SEAL	CAP FR CUSH UNDER DUST SEAL	2
	290	90110-KHG8-901	BOLT STUB II 8*22	BOLT STUB II 8*22	4
	316	90306-GLW0-90A	NUT FLANGE 12MM	NUT FLANGE 12MM	1
	291	90309-GLW0-90A	NUT U FLANGE 8MM	NUT U FLANGE 8MM	4
	283	90754-GHC8-00A	SEAL DUST 20*32*5	SEAL DUST 20*32*5	1
	284	90912-GHC8-00A	BEARING	BEARING	2
	284A	90912-GHC8-00D	BEARING	BEARING	2
	295	91251-GAE1-004	OIL SEAL 41*51*5	OIL SEAL 41*51*5	1
	303	91256-GAC1-004	SEAL DUST	SEAL DUST	1
	311	94050-06080	NUT FLANGE 6MM	NUT FLANGE 6MM	1
	308	95701-06028-08	BOLT FLANGE 86*28	BOLT FLANGE 86*28	1

KYMCO

F08 Rear Wheel

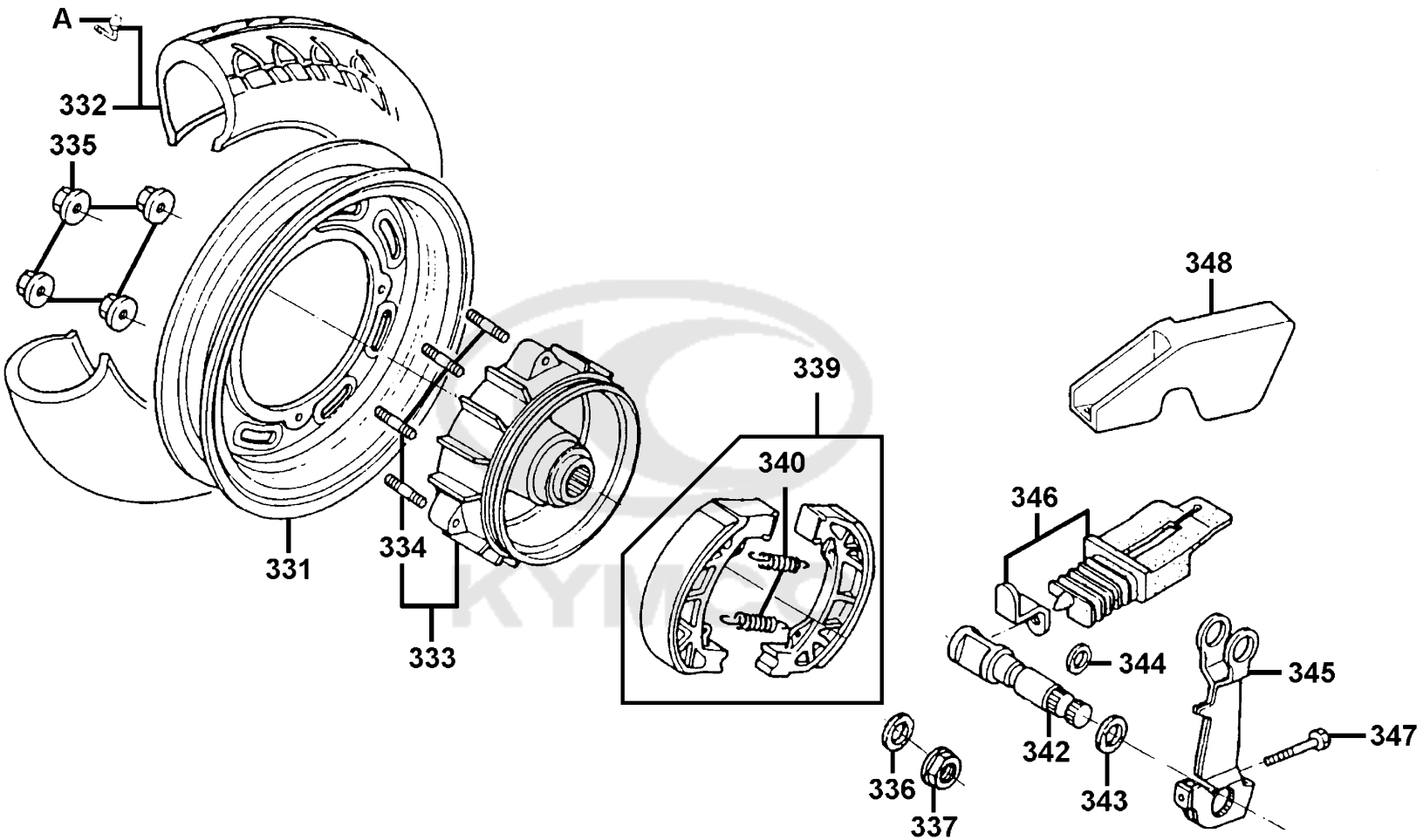

Sales mark	Ref no	Part no	Description	Reg description	Regd no
**	333	42610-GFY6-921	HUB SUB COMP RR	HUB SUB COMP RR	1
**	331	42705-GFY6-30A	RIM COMP WHEEL	RIM COMP WHEEL	1
**	331	42705-GFY6-30B	RIM COMP WHEEL	RIM COMP WHEEL	1
	332	42710-KFLF-90B	TIRE ASSY 350-10 /KENDA	TIRE ASSY 350-10 /KENDA	1
	A	42753-0D04-900	RIM VALVE/PVR 70	RIM VALVE/PVR 70	1
	339	4312A-KXCX-900	SHOE ASSY RR BRAKE	SHOE ASSY RR BRAKE	2
	342	43141-GFY6-910	CAM RR BRAKE	CAM RR BRAKE	1
	345	43410-GFY6-901	ARM COMP RR BRAKE	ARM COMP RR BRAKE	1
	346	43415-GFY6-901	COVER ASSY RR BRK ARM	COVER ASSY RR BRK ARM	1
	348	43416-GFY6-901	GUARD RR BRK ARM	GUARD RR BRK ARM	1
	340	45133-0H28-001	SPRING BRAKE SHOE	SPRING BRAKE SHOE	2
	334	90110-KHG8-901	BOLT STUB II 8*22	BOLT STUB II 8*22	4
	337	90305-KNBN-90B	NUT FLANGE 16MM	NUT FLANGE 16MM	1
	335	90309-GLW0-90A	NUT U FLANGE 8MM	NUT U FLANGE 8MM	4
	336	90501-KNBN-901	WASHER 16MM	WASHER 16MM	1
	343	91352-KHG8-83B	O-RING 11.3*1.3	O-RING 11.3*1.3	1
	344	91353-GFY6-900	O-RING 13.1*10	O-RING 13.1*10	1
	347	95701-06032-08	BOLT FLANGE 6*32	BOLT FLANGE 6*32	1

F09 Seat

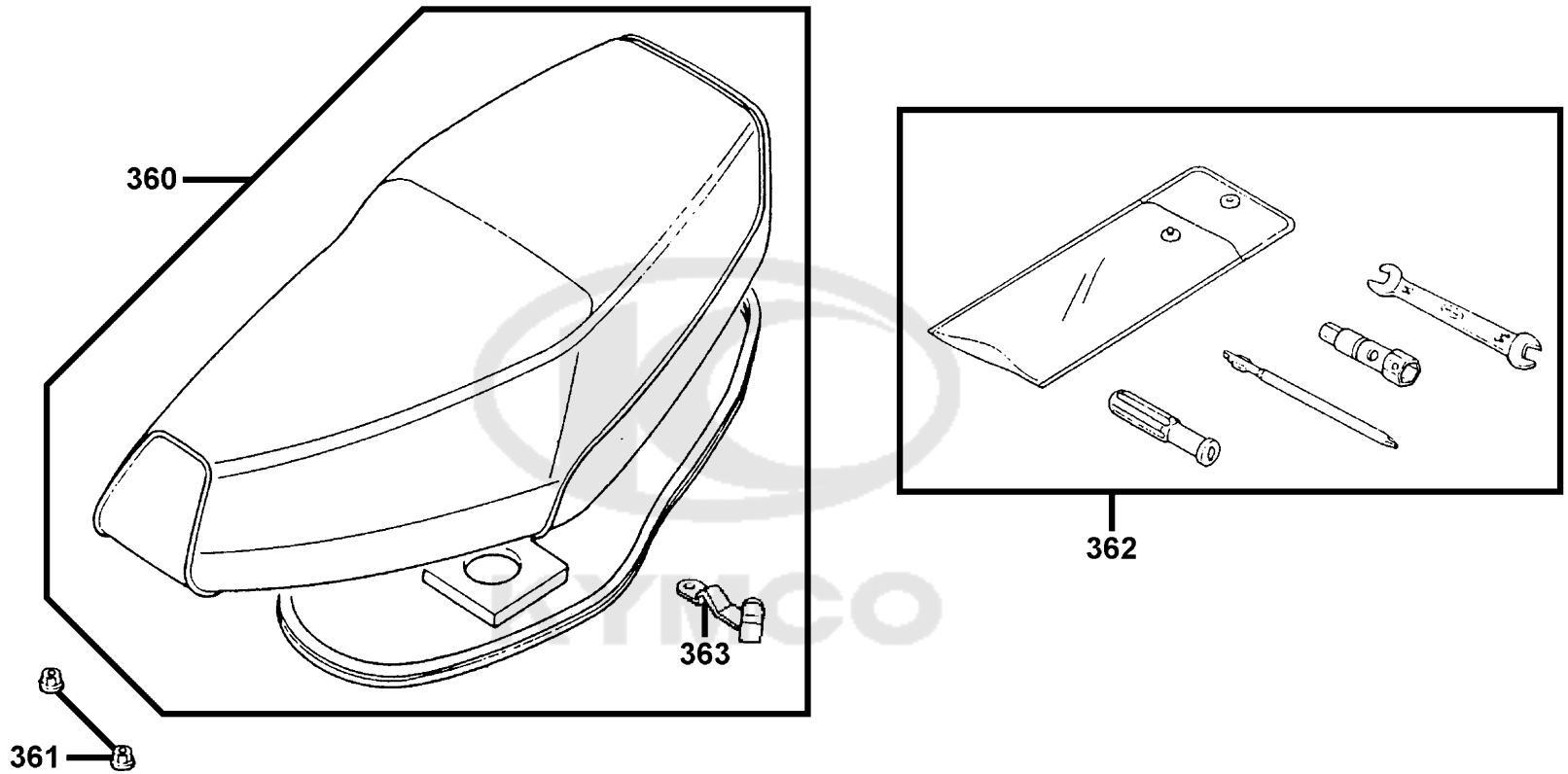

Sales mark	Ref no	Part no	Description	Reg description	Regd no
**	360	77100-GFY6-901	SEAT COMP DOUBLE	SEAT COMP DOUBLE	1
	363	77106-GFY6-940	HOOK HELMET RH	HOOK HELMET RH	1
	362	89010-GFY6-C00	TOOL SET	TOOL SET	1
	361	94050-06080	NUT FLANGE 6MM	NUT FLANGE 6MM	2

KYMCO

F10	Fuel Tank

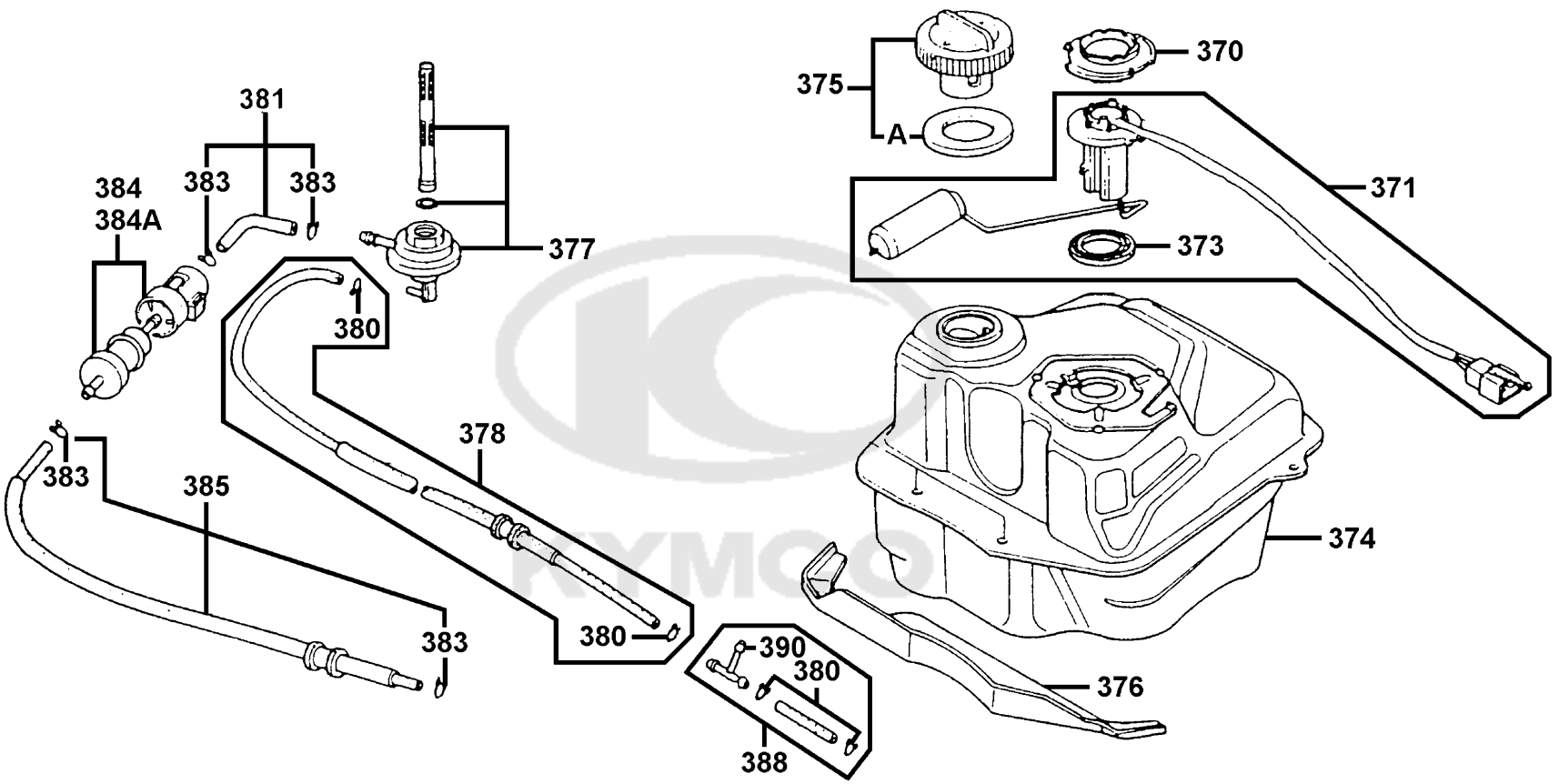

Sales mark	Ref no	Part no	Description	Reg description	Regd no
	384	1691A-GFY6-90A	STRAINER ASSY FUEL	STRAINER ASSY FUEL	1
	384A	1691A-GFY6-90B	STRAINER ASSY FUEL	STRAINER ASSY FUEL	1
	377	16950-KKJ9-75A	AUTO COCK ASSY FUEL	AUTO COCK ASSY FUEL	1
	374	17500-GFY6-900	TANK COMP FUEL	TANK COMP FUEL	1
	376	17551-GFY6-901	PLATE FUEL GUIDE	PLATE FUEL GUIDE	1
	375	17620-GGS7-67A	CAP COMP FUEL FILLER	CAP COMP FUEL FILLER	1
	A	17631-0F96-701	PACKING FUEL FILLER CAP	PACKING FUEL FILLER CAP	1
	381	1768A-GFY6-901	TUBE ASSY FUEL (COCK-STRAINER)	TUBE ASSY FUEL (COCK-STRAINER)	1
	378	1768B-GFY6-901	TUBE ASSY VACUUM	TUBE ASSY VACUUM	1
	385	1768C-GFY6-901	TUBE FUEL ASSY	TUBE FUEL ASSY	1
	373	37801-GGA7-701	PACKING BASE	PACKING BASE	1
	370	37802-GGA7-701	RET FUEL UNIT	RET FUEL UNIT	1
	371	3780A-GFY6-940	FUEL UNIT ASSY	FUEL UNIT ASSY	1
	390	38773-PKB9-001	JOINT 3 WAY 3.5	JOINT 3 WAY 3.5	1
	388	3877A-PKB9-001	JOINTASSY 3 WAY	JOINTASSY 3 WAY	1
	380	95002-02070	CLIP B7 PORT TUBE	CLIP B7 PORT TUBE	4
	383	95002-02080	CLIP B8 CHAMBER TUBE	CLIP B8 CHAMBER TUBE	4

KYMCO

F11 Battery

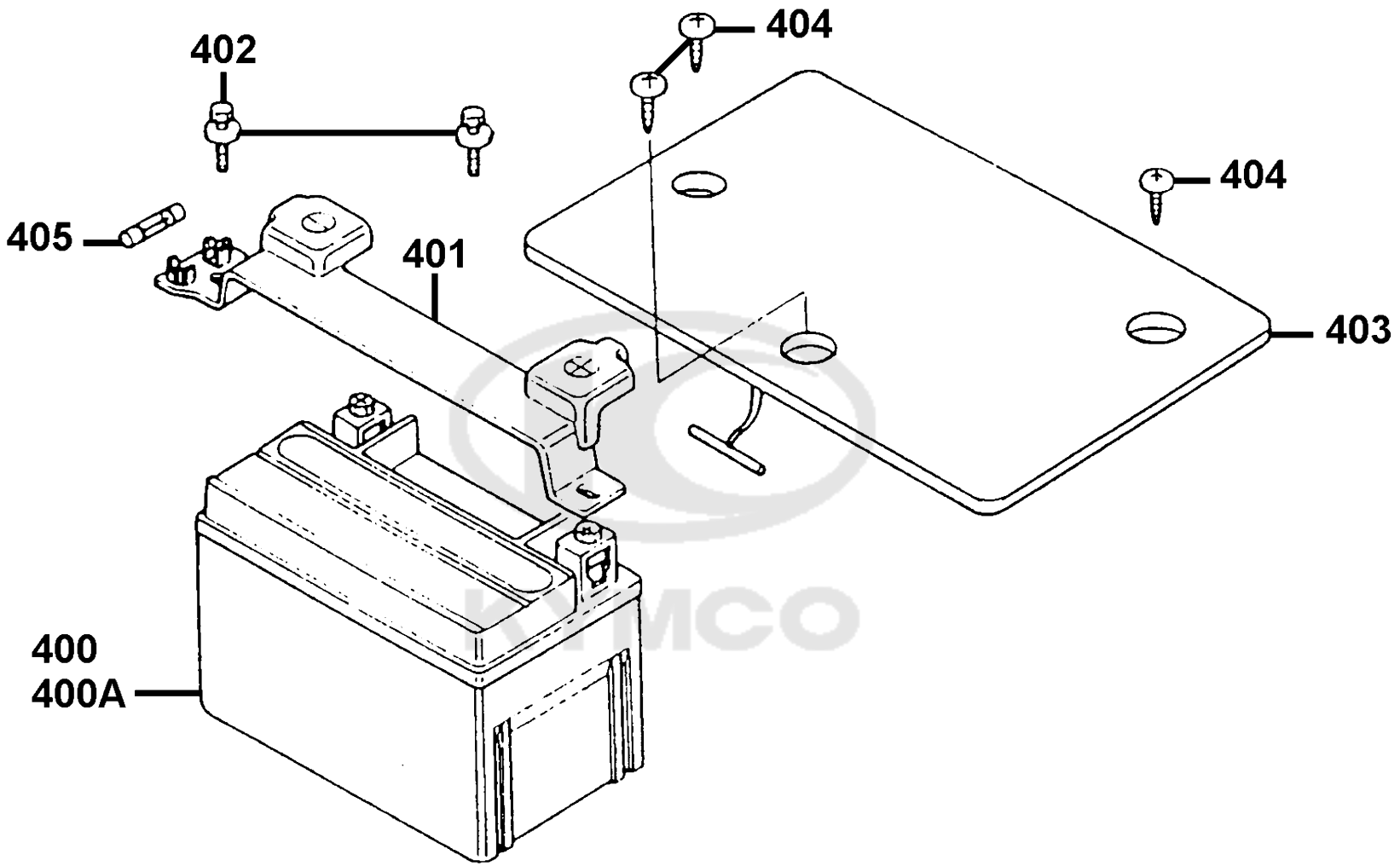

Sales mark	Ref no	Part no	Description	Reg description	Regd no
	400	31500-GFY6-94A	BATTERY YTX7A-BS	BATTERY YTX7A-BS	1
	400A	31500-GFY6-94B	BATTERY GTX7A-BS	BATTERY GTX7A-BS	1
**	403	50326-GFY6-901	COVER BATTERY	COVER BATTERY	1
	401	50328-GFY6-901	BAND BATTERT	BAND BATTERT	1
	402	90302-GFY6-901	BOLT WASH 5*12	BOLT WASH 5*12	2
	404	93903-45360	SCREW TAPPING 5*16	SCREW TAPPING 5*16	3
	405	98200-10700	FUSE A7	FUSE A7	1

KYMCO

F12 Body CoverLuggage Box

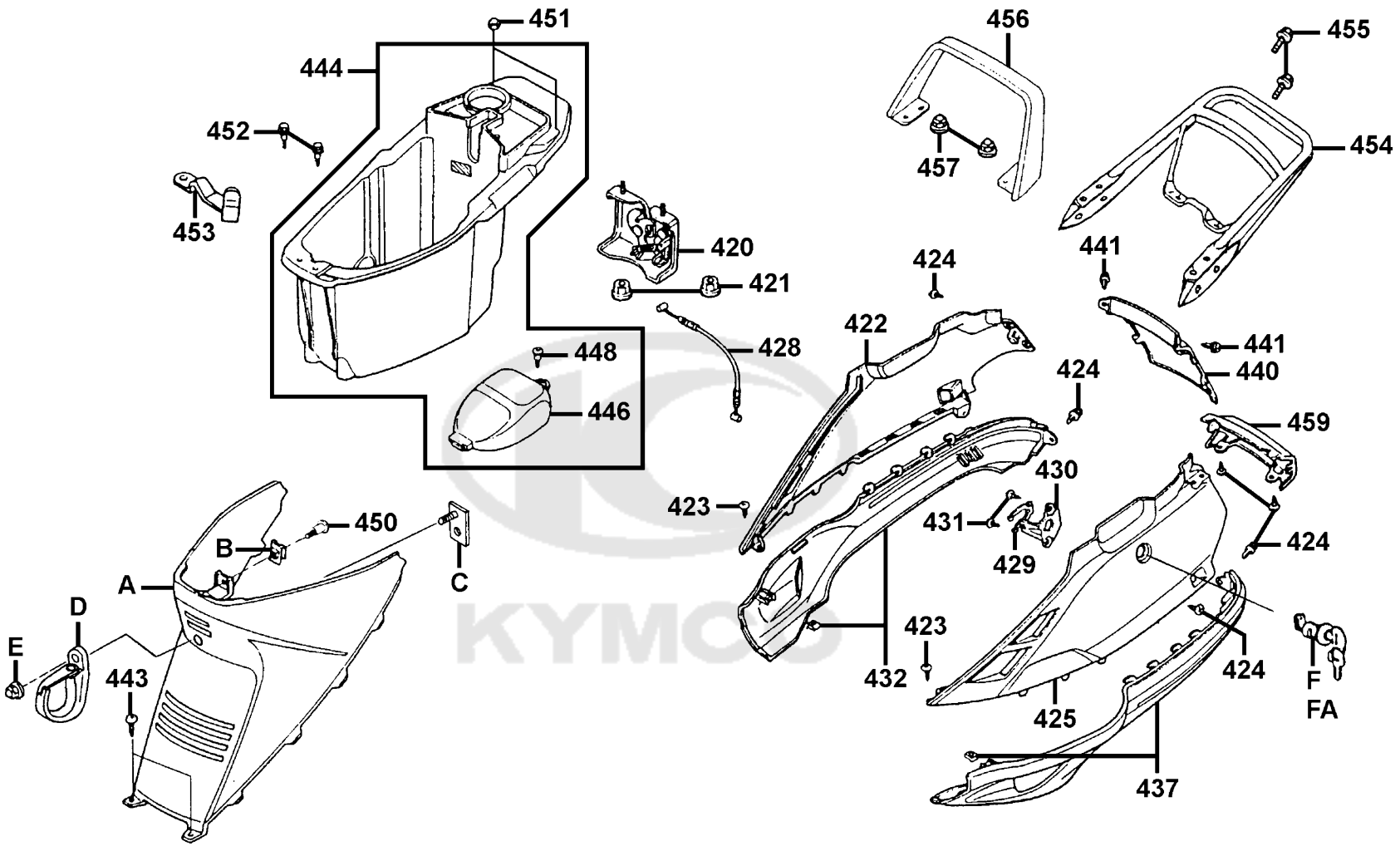

Sales mark	Ref no	Part no	Description	Reg description	Regd no
	429	75581-6C73-001	SET SPG LOCK KEY	SET SPG LOCK KEY	1
	453	77106-GFY6-901	HOOK HELMET	HOOK HELMET	1
	430	77232-GFY6-901	STAY SEAT LOCK	STAY SEAT LOCK	1
	420	77235-GFY6-901	SEAT CATCH COMP	SEAT CATCH COMP	1
	F	77239-GFY6-315-M1	KEY SEAT COMP	KEY SEAT COMP	1
	FA	77239-GFY6-315-M2	KEY SEAT COMP	KEY SEAT COMP	1
	428	77240-GGS7-001	CABLE SEAT LOCK	CABLE SEAT LOCK	1
**	A	80152-GFY6-901	COVER CENTER	COVER CENTER	1
**	454	8120A-KALA-900	CARRIER ASSY LUGGAGE	CARRIER ASSY LUGGAGE	1
**	446	81257-GFY6-901	COVER ASSY CARB MAINT	COVER ASSY CARB MAINT	1
**	444	8126A-KFAF-S00	BOX ASSY LUGGAGE	BOX ASSY LUGGAGE	1
**	456	81300-GFY6-901	GRIP RR	GRIP RR	1
**	422	83500-GFY6-901	COVER R BODY	COVER R BODY	1
**	432	83501-GFY6-901	MOLDING R RR SIDE	MOLDING R RR SIDE	1
**	425	83600-GFY6-901	COVER L BODY	COVER L BODY	1
**	437	83601-GFY6-901	MOLDING L RR SIDE	MOLDING L RR SIDE	1
**	440	83750-GFY6-901	COVER RR CENTER/plastic	COVER RR CENTER/plastic	1
**	459	83751-GFY6-901	MOLDING RR CENTER	MOLDING RR CENTER	1
	D	8376A-GFY6-900	HOOK CENTER ASSY	HOOK CENTER ASSY	1
	C	83770-GFY6-900	STAY CENTER CLIP	STAY CENTER CLIP	1

KYMCO

Sales mark	Ref no	Part no	Description	Reg description	Regd no
	452	90111-1G87-001	BOLT FLANGE 6*14	BOLT FLANGE 6*14	2
	457	90215-GLM0-910	NUT CAP 6MM	NUT CAP 6MM	4
	451	90301-6D34-671	NUT FLANGE 6MM	NUT FLANGE 6MM	2
	B	90305-GHK8-001	NUT CLIP 6MM	NUT CLIP 6MM	1
	450	90380-GGS7-001	SCREW SPECIAL 6*16	SCREW SPECIAL 6*16	1
	448	90381-GEZ5-001	SCREW SPECIAL 6*17	SCREW SPECIAL 6*17	1
	441	90683-GAR1-004	CLIP BODY COVER	CLIP BODY COVER	2
	455	93404-06022-08	BOLT FLANGE 6*22	BOLT FLANGE 6*22	2
	424	93903-14360	SCREW TAPPING 4*12	SCREW TAPPING 4*12	6
	423	93903-25320	SCREW TAPPING 5*16	SCREW TAPPING 5*16	2
	431	93903-34360	SCREW TAPPING 4*12	SCREW TAPPING 4*12	2
	443	93903-GFY6-900	SCREW TAPP 4*14	SCREW TAPP 4*14	2
	E	94021-06020-0S	NUT CAP 6MM	NUT CAP 6MM	1
	421	94050-06080	NUT FLANGE 6MM	NUT FLANGE 6MM	2

KYMCO

F13 Air Cleaner

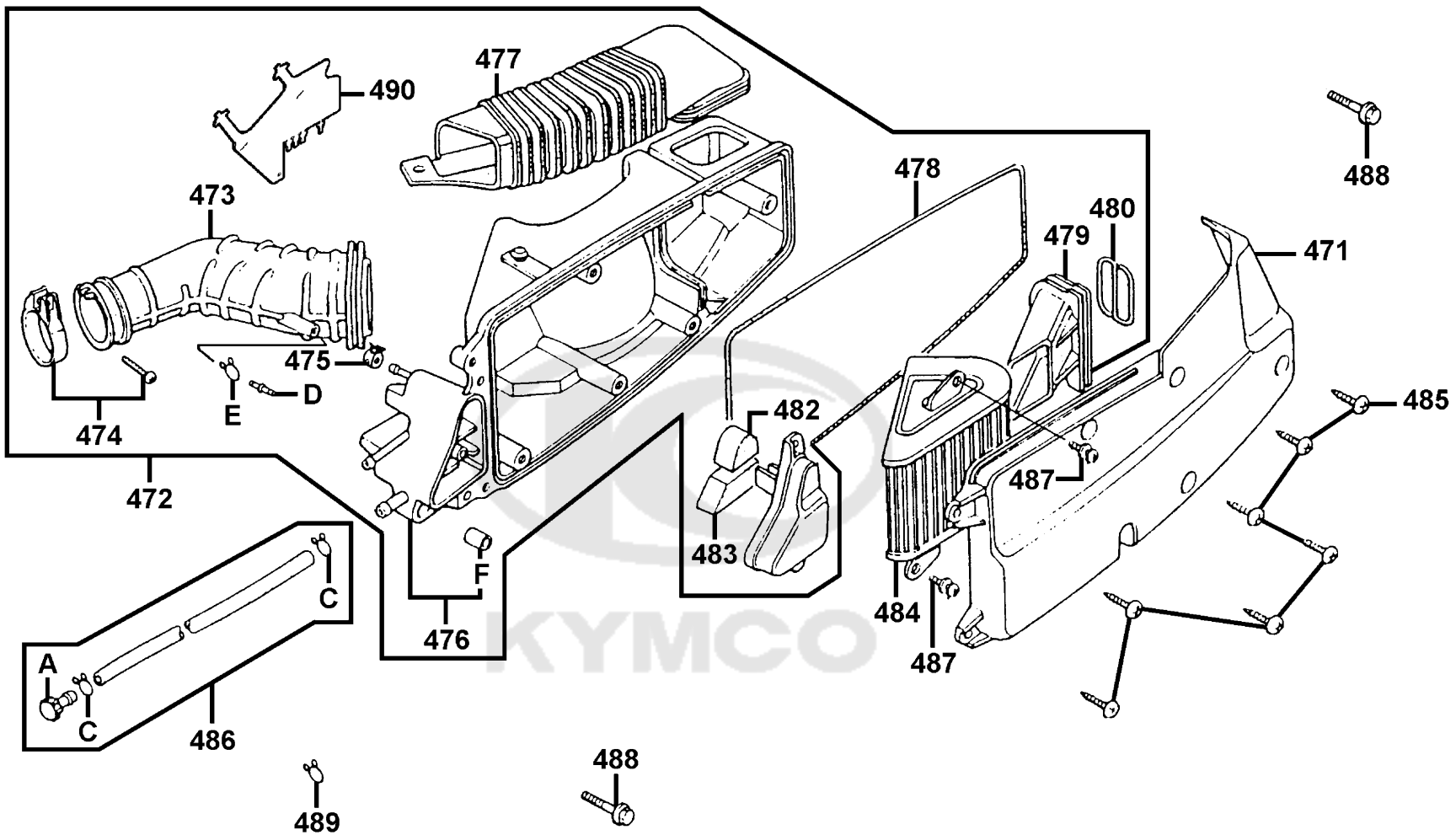

Sales mark	Ref no	Part no	Description	Reg description	Regd no
	F	17208-GAR1-011	COLLAR AIR/C SET	COLLAR AIR/C SET	2
	484	17211-GFY6-22A	ELEMENT COMP AIR/C	ELEMENT COMP AIR/C	1
	478	17214-GFY6-901	SEAL AIR/C COVER	SEAL AIR/C COVER	1
	476	17230-KFBF-910	CASE AIR/C	CASE AIR/C	1
	471	17231-GFY6-901	COVER AIR/C	COVER AIR/C	1
	482	17234-GFY6-901	FILTER BREATHER	FILTER BREATHER	1
	483	17235-GFY6-901	FILTER OIL CATCH	FILTER OIL CATCH	1
	472	1723A-GFY6-C30	CASE ASSY AIR/C	CASE ASSY AIR/C	1
	473	17253-GFY6-901	TUBE AIR/C CONN	TUBE AIR/C CONN	1
	D	17254-KACA-P00	PLUG AIR/C CONN TUBE	PLUG AIR/C CONN TUBE	1
	479	17255-KFBF-910	DUST AIR/C INLET	DUST AIR/C INLET	1
	477	17257-GFY6-920	DUCT AIR/C CASE	DUCT AIR/C CASE	1
	480	17258-GFY6-901	SPRING INLET DUCT	SPRING INLET DUCT	1
	486	1736A-GFY6-900	TUBE DRAIN ASSY	TUBE DRAIN ASSY	1
	A	17370-4K19-701	PLUG BREATHER TUBE	PLUG BREATHER TUBE	1
	C	17371-1D74-671	CLIP BREATHER TUBE	CLIP BREATHER TUBE	2
	490	80103-GFY6-900	PLATE A SPLASH BOARD	PLATE A SPLASH BOARD	1
	488	90114-GDM4-011	BOLT FLANGE SH 6*28	BOLT FLANGE SH 6*28	2
	474	90652-GFY6-901	BAND 49 AIR/C CONNECTING TUBE	BAND 49 AIR/C CONNECTING TUBE	1
	487	93891-05010-08	SCREW WASHER 5*10	SCREW WASHER 5*10	2

Sales mark	Ref no	Part no	Description	Reg description	Regd no
	485	93903-25460	SCREW TAPPING 5*20	SCREW TAPPING 5*20	7
	489	95002-02120	CLIP B12 TUBE	CLIP B12 TUBE	1
	E	95002-02130	CLIP B12.5 TUBE	CLIP B12.5 TUBE	1
	475	95002-41050-00	CLIP D10.5 TUBE	CLIP D10.5 TUBE	1

KYMCO

F14	Exhaust Muffler

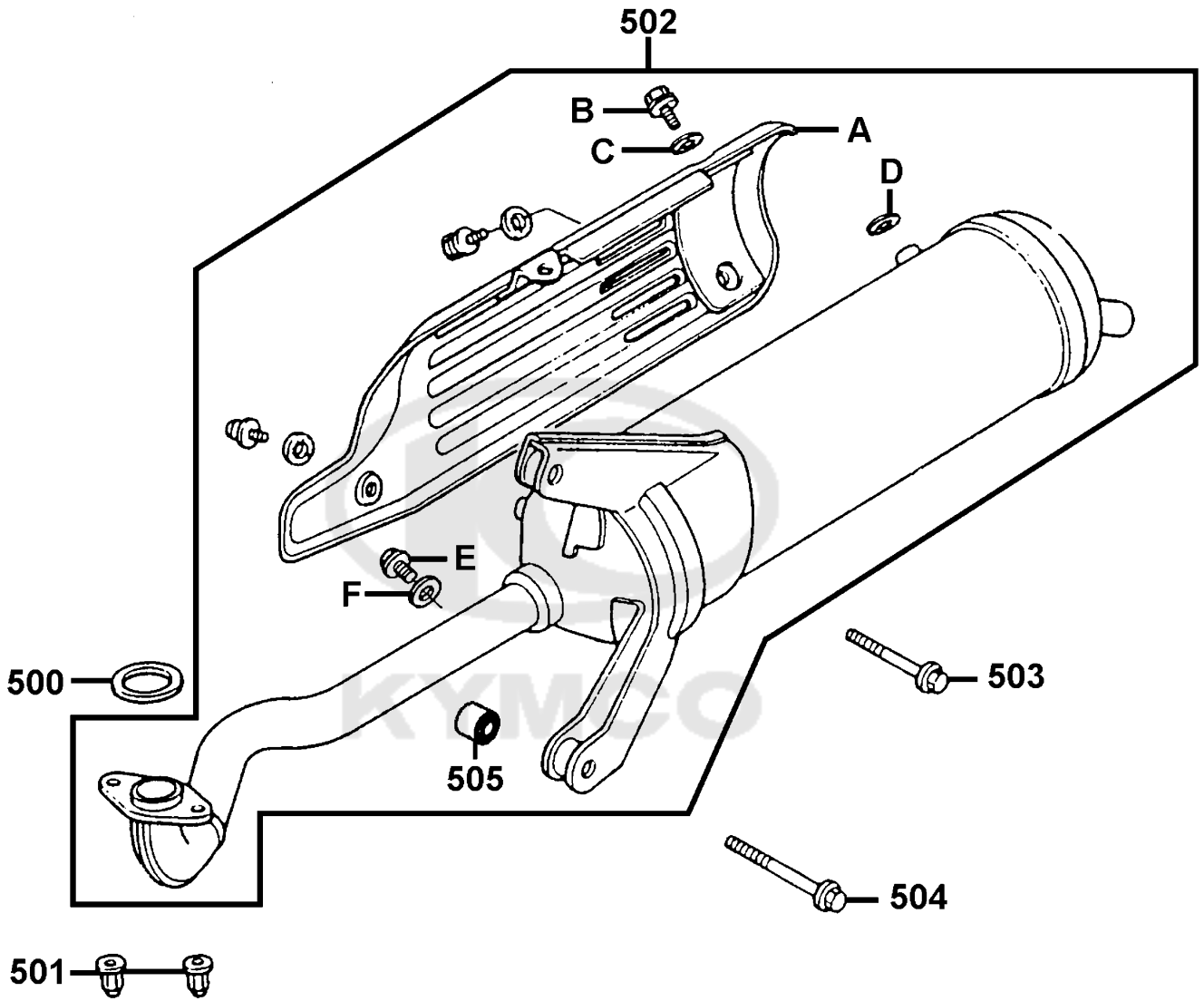

Sales mark	Ref no	Part no	Description	Reg description	Regd no
	505	11203-GFY6-901	RUBBER BUSH MUFFLER STAY	RUBBER BUSH MUFFLER STAY	1
	500	18291-LBD4-900	GASKET EXH PIPE	GASKET EXH PIPE	1
	D	18293-GFY6-900	PACKING PROTECTOR	PACKING PROTECTOR	4
	502	1830A-GFY6-901	MUFFLER ASSY EXH	MUFFLER ASSY EXH	1
	A	18318-GFY6-901	PROTECTOR MUFF	PROTECTOR MUFF	1
	503	90021-GFY6-900	BOLT WASHER COMP 8*42	BOLT WASHER COMP 8*42	1
	501	90301-GFY6-901	NUT (HEX) CAP 8MM	NUT (HEX) CAP 8MM	2
	C	94101-06200	WASHER PLAIN 6MM	WASHER PLAIN 6MM	3
	F	94101-06800	WASHER PLAIN 6MM	WASHER PLAIN 6MM	1
	504	95801-08042-06	BOLT FLANGE 8*42	BOLT FLANGE 8*42	1
	E	96001-06008-06	BOLT FLANGE SH 6X18	BOLT FLANGE SH 6X18	1
	B	96001-06012-02	BOLT FLANGE SH 6*12	BOLT FLANGE SH 6*12	3

KYMCO

F15	StandKick Starter Arm

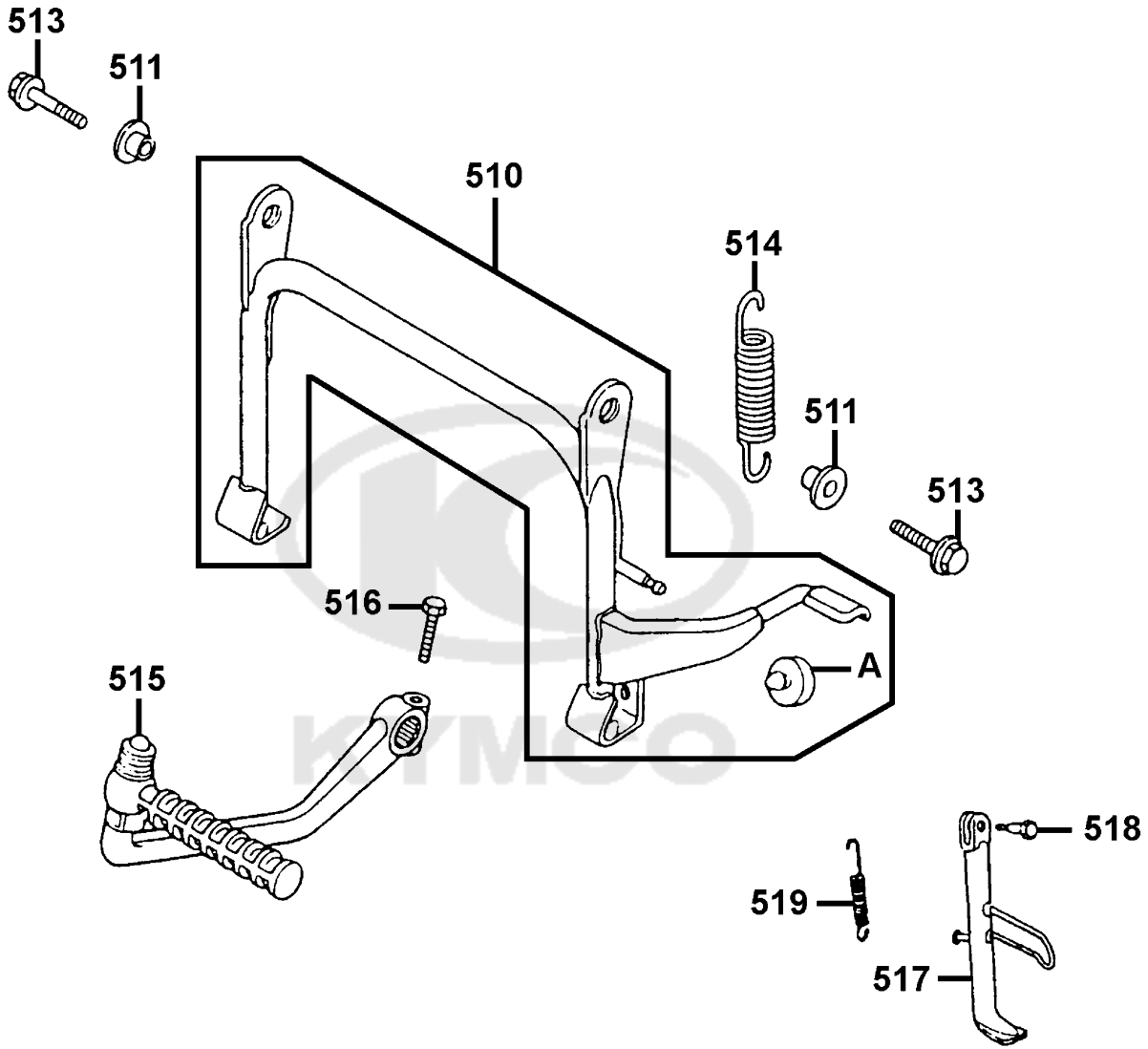

Sales mark	Ref no	Part no	Description	Reg description	Regd no
	515	28300-GFY6-901	ARM ASSY KICK STARTER	ARM ASSY KICK STARTER	1
	511	50502-GFY6-901	COLLAR MAIN STAND	COLLAR MAIN STAND	2
	A	50505-GFY6-901	STPR RUB STAND	STPR RUB STAND	1
	510	5050A-KFAF-900	STAND ASSY MAIN	STAND ASSY MAIN	1
	517	50530-KFBF-900	SIDE STAND COMP	SIDE STAND COMP	1
	518	90108-GFY6-901	SCREW SIDE STAND PIVOT	SCREW SIDE STAND PIVOT	1
	516	92201-06022-0G	BOLT HEX 6*22	BOLT HEX 6*22	1
	514	95014-71402	SPG D MAIN STAND	SPG D MAIN STAND	1
	519	95014-72204	SPRING B1 SIDE STAND	SPRING B1 SIDE STAND	1
	513	95801-10025-08	BOLT FLANGE 10*25	BOLT FLANGE 10*25	2

KYMCO

F16	Rear Cushion

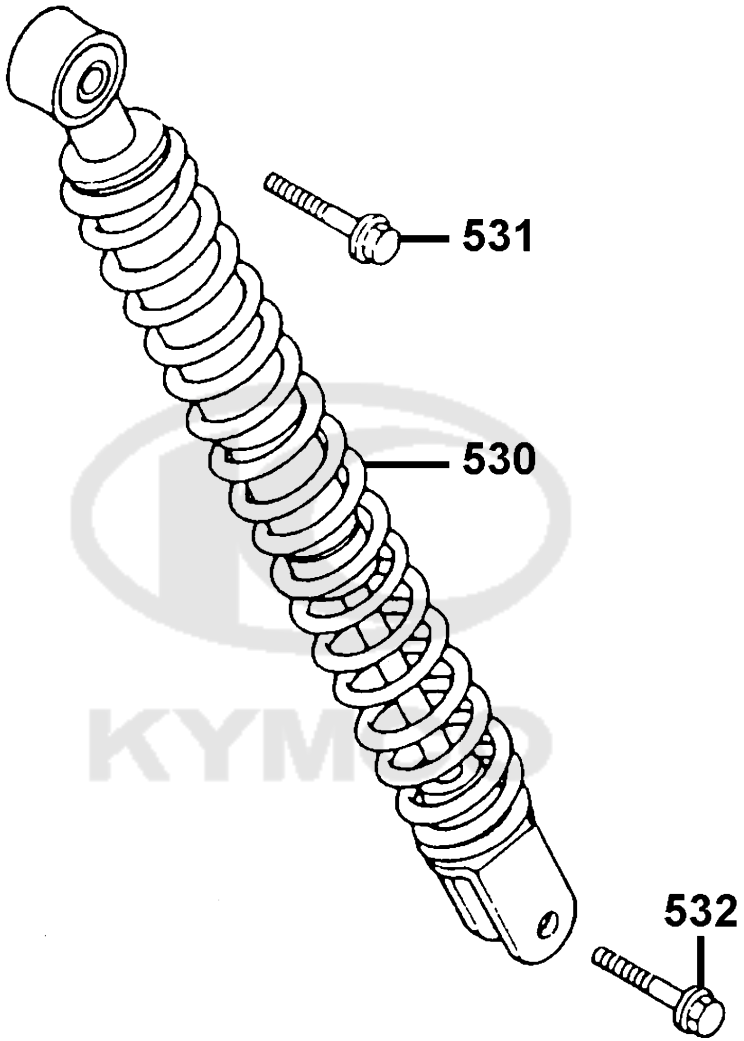

Sales mark	Ref no	Part no	Description	Reg description	Regd no
	530	52400-GFY6-92A	CUSHION ASSY REAR	CUSHION ASSY REAR	1
	532	95801-08035-08	BOLT FLANGE 8*35	BOLT FLANGE 8*35	1
	531	95801-10035-08	BOLT FLANGE 10*35	BOLT FLANGE 10*35	1

KYMCO

F17	Front Winker

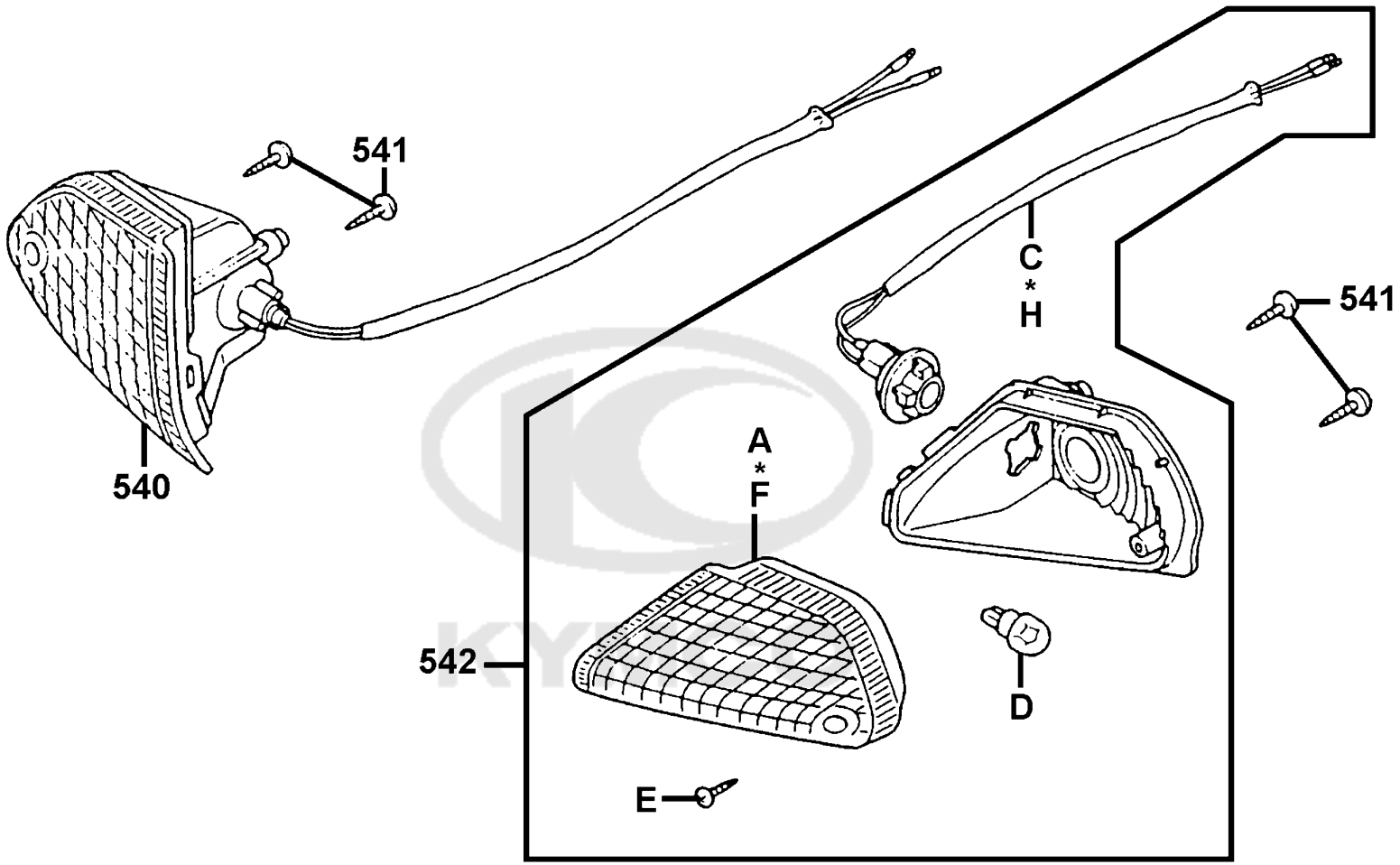

Sales mark	Ref no	Part no	Description	Reg description	Regd no
	540	33400-GFY6-900	WINKER ASSY FR R	WINKER ASSY FR R	1
	A	33402-GGS7-004	LENS R FR WINKER	LENS R FR WINKER	1
	C	33406-GFY6-901	SOCKET COMP R FR WINKER	SOCKET COMP R FR WINKER	1
	542	33450-GFY6-900	WINKER ASSY FR L	WINKER ASSY FR L	1
	F	33452-GGS7-004	LENS L FR WINKER	LENS L FR WINKER	1
	H	33456-GFY6-901	SOCKET COMP L FR WINKER	SOCKET COMP L FR WINKER	1
	D	34905-GKM9-003	BLUB WINKER 12V10W	BLUB WINKER 12V10W	2
	E	93901-32510	SCREW TAPPING 3*12	SCREW TAPPING 3*12	2
	541	93903-34360	SCREW TAPPING 4*12	SCREW TAPPING 4*12	4

KYMCO

F18	Tail Light

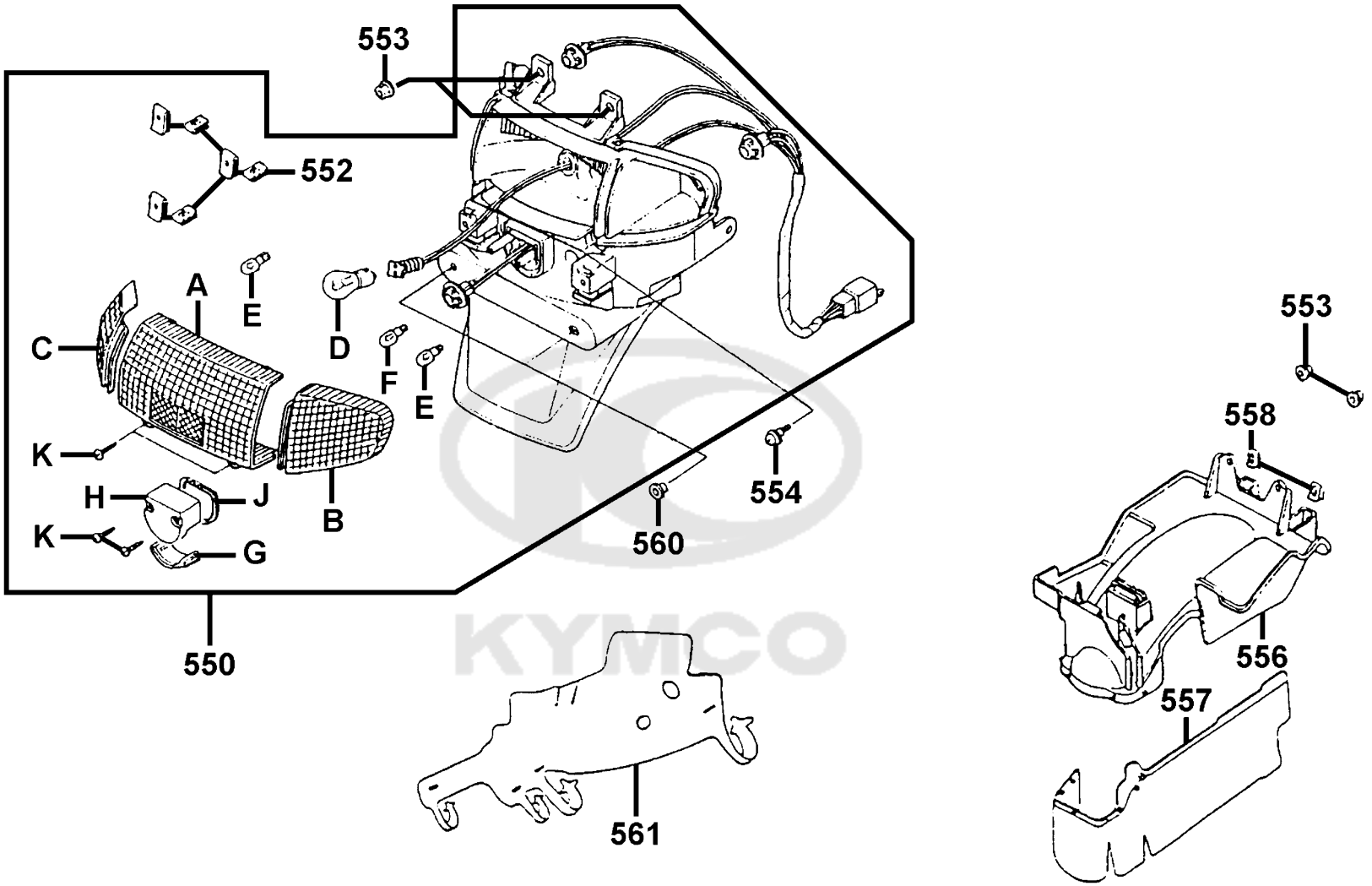

Sales mark	Ref no	Part no	Description	Reg description	Regd no
	A	33702-GFY6-90A	LENS COMP TAIL LIGHT	LENS COMP TAIL LIGHT	1
	B	33703-GFY6-90A	LENS R RR WINKER	LENS R RR WINKER	1
	G	33705-GCN3-67A	LENS LICENSE	LENS LICENSE	1
	H	33706-GCN3-67A	COVER LICENSE	COVER LICENSE	1
	J	33709-KBAB-003	PACKING LICENSE	PACKING LICENSE	1
**	550	3370A-GFY6-901	LIGHT ASSY RR COMB	LIGHT ASSY RR COMB	1
	C	33753-GFY6-90A	LENS L RR WINKER	LENS L RR WINKER	1
	E	34905-GKM9-003	BLUB WINKER 12V10W	BLUB WINKER 12V10W	2
	D	34906-2H68-601	BULB TAIL & STOP 12V18W/5W	BULB TAIL & STOP 12V18W/5W	1
	F	34908-GGA7-70A	BULB WEDGE BASE 12V*3.4W	BULB WEDGE BASE 12V*3.4W	1
	561	80102-GFY6-901	PLATE SPLASH BOARD	PLATE SPLASH BOARD	1
	557	80104-GFY6-941	PLATE SPLASH GUARD	PLATE SPLASH GUARD	1
	556	80105-GFY6-941	FENDER REAR	FENDER REAR	1
	553	90301-6D34-671	NUT FLANGE 6MM	NUT FLANGE 6MM	4
	552	90302-SDA4-004	NUT SPRING 4MM	NUT SPRING 4MM	6
	558	90320-GCC3-001	NUT SPRING MS	NUT SPRING MS	2
	560	90522-0H28-001	WASHER CHAIN CASE SETTING	WASHER CHAIN CASE SETTING	2
	554	91508-GCC3-001	SCREW PAN 5*12.5	SCREW PAN 5*12.5	2
	K	91508-KGV7-67A	SCREW TAPPING 4*14	SCREW TAPPING 4*14	4

F19 Wire Harness

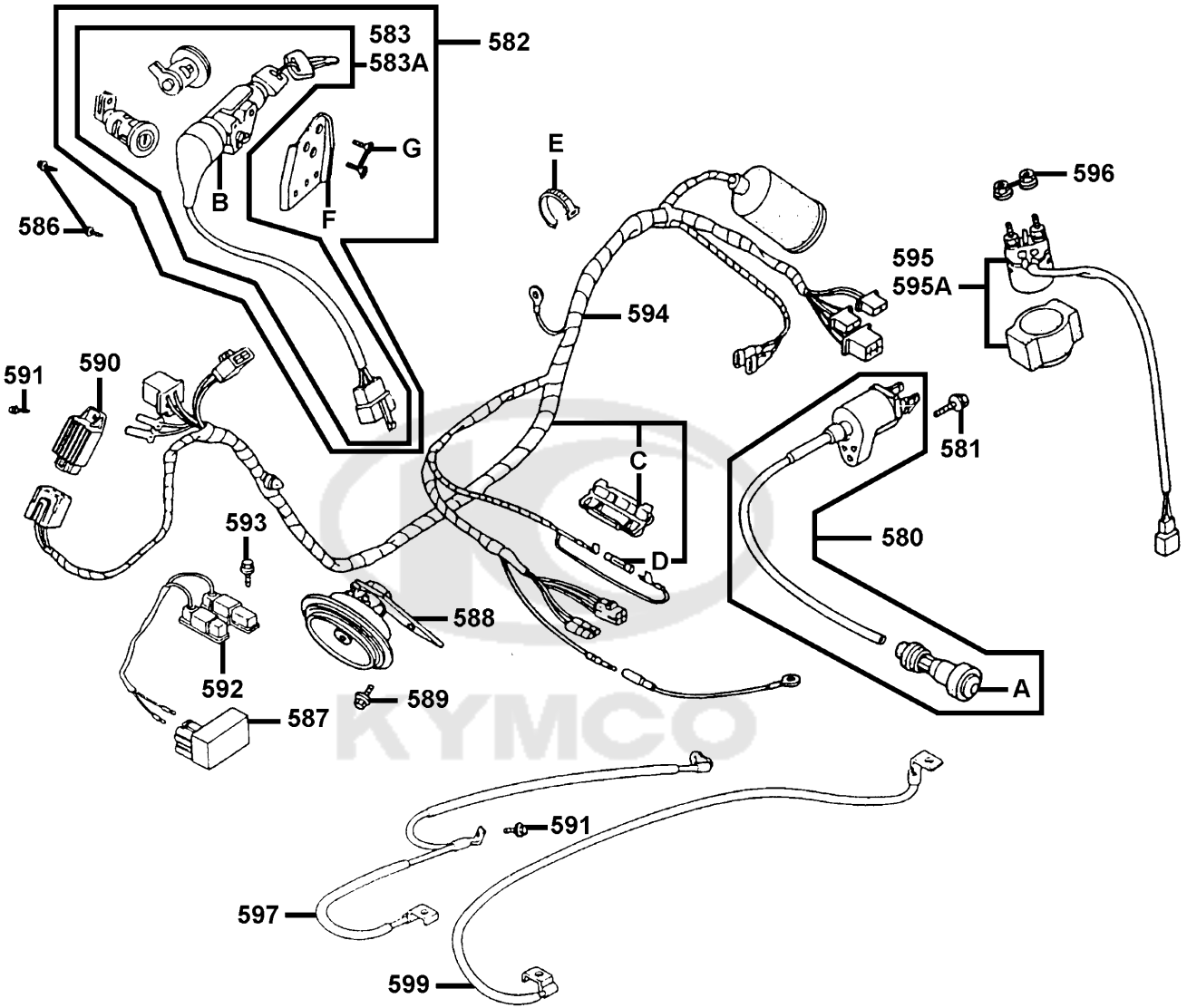

Sales mark	Ref no	Part no	Description	Reg description	Regd no
	587	30410-GFY6-901	UNIT COMP CDI	UNIT COMP CDI	1
	580	3051A-GFY6-901	COIL ASSY IGN	COIL ASSY IGN	1
	A	30700-GFY6-901	CAP ASSY NOISE SUPPRESOR	CAP ASSY NOISE SUPPRESOR	1
	590	31600-KUDU-900	REG REC COMP	REG REC COMP	1
	594	32100-GFY6-941	HARNESS WIRE	HARNESS WIRE	1
	C	32120-1E55-001	CASE FUSE 7A	CASE FUSE 7A	1
	E	32161-4H38-000	BAND WIRE	BAND WIRE	1
	599	32411-GFY6-921	CABLE BAT	CABLE BAT	1
	597	32412-GFY6-941	CABLE EARTH	CABLE EARTH	1
	583	35010-GFY6-91A	KEY SET	KEY SET	1
	583A	35010-GFY6-91B	KEY SET	KEY SET	1
	582	3501A-GFY6-900	SW ASSY LOCK	SW ASSY LOCK	1
	B	35100-GFY6-305	SW SET COMB LOCK	SW SET COMB LOCK	1
	592	35400-GFY6-900	RESISTOR COMP	RESISTOR COMP	1
	595	35850-GFY6-900	SET START MAG	SET START MAG	1
	595A	35850-GFY6-90A	SET START MAG	SET START MAG	1
	588	38110-GFY6-90B	HORN COMP	HORN COMP	1
	F	53129-GFY6-900	PLATE HANDLE LOCK	PLATE HANDLE LOCK	1
	G	90164-0H28-900	SCREW FLAT U LOCK 6*12	SCREW FLAT U LOCK 6*12	2
	581	92201-05020-0H	BOLT HEX 5*20	BOLT HEX 5*20	1

Sales mark	Ref no	Part no	Description	Reg description	Regd no
	596	94050-06080	NUT FLANGE 6MM	NUT FLANGE 6MM	2
	591	95701-06012-08	BOLT FLANGE 6*12	BOLT FLANGE 6*12	2
	593	95701-06016-08	BOLT FLANGER 6*12	BOLT FLANGER 6*12	1
	589	95701-08012-08	BOLT FLANGE 8X12	BOLT FLANGE 8X12	1
	586	95701-08016-08	BOLT FLANGE 8*16	BOLT FLANGE 8*16	2
	D	98200-10700	FUSE A7	FUSE A7	1

KYMCO

F20 Frame Body

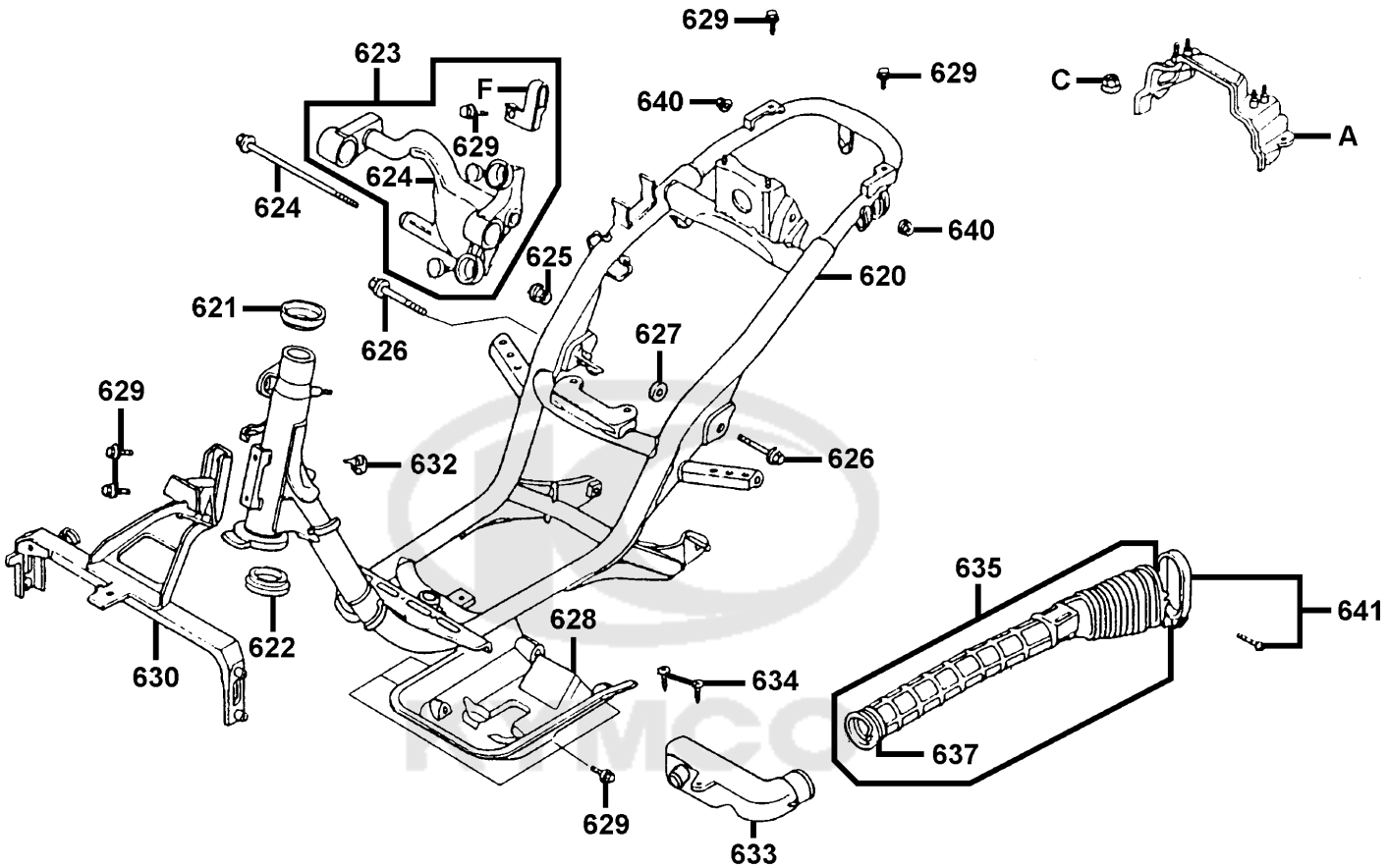

Sales mark	Ref no	Part no	Description	Reg description	Regd no
	641	11346-GFY6-901	BAND L COVER DUCT	BAND L COVER DUCT	1
	635	1134A-GFY6-901	DUCT L COVER ASSY	DUCT L COVER ASSY	1
	637	17242-GFM6-001	BAND L DUCT COVER	BAND L DUCT COVER	1
	633	1940A-KGC8-C00	CHAMBER AIR	CHAMBER AIR	1
	620	50100-GFY6-C30	FRAME BODY COMP	FRAME BODY COMP	1
	621	50301-KGN7-671	RACE UP STRG BALL	RACE UP STRG BALL	1
	622	50302-2H68-011	RACE (STRG BOT) BALL	RACE (STRG BOT) BALL	1
	630	50310-GFY6-941	STAY LEG SHIELD	STAY LEG SHIELD	1
	624	50350-GFY6-940	ENG HANGER COMP	ENG HANGER COMP	1
	F	50354-GFY6-901	CLIP FUEL TUBE	CLIP FUEL TUBE	1
	623	5035A-GFY6-200	ENG HANGER COMP	ENG HANGER COMP	1
	628	50613-GFY6-941	COVER UNDER	COVER UNDER	1
	632	64307-GFY6-901	CAP PIPE END	CAP PIPE END	1
	A	81202-KALA-900	BRKT CARRIER	BRKT CARRIER	1
	624	90105-GFY6-901	BOLT FLANGE 10*184	BOLT FLANGE 10*184	1
	626	90106-GFY6-901	BOLT FLANGE 10*55	BOLT FLANGE 10*55	2
	627	90121-GFY6-901	COLLAR DISTANCE	COLLAR DISTANCE	1
	625	90304-GHE8-004	NUT U 10MM	NUT U 10MM	1
	634	93903-35320	SCREW TAPPING 5*16	SCREW TAPPING 5*16	2
	C	94050-05080	NUT FLANGE 5MM	NUT FLANGE 5MM	2

Sales mark	Ref no	Part no	Description	Reg description	Regd no
	640	94050-06080	NUT FLANGE 6MM	NUT FLANGE 6MM	2
	629	95701-06012-08	BOLT FLANGE 6*12	BOLT FLANGE 6*12	9

KYMCO

Caution Label

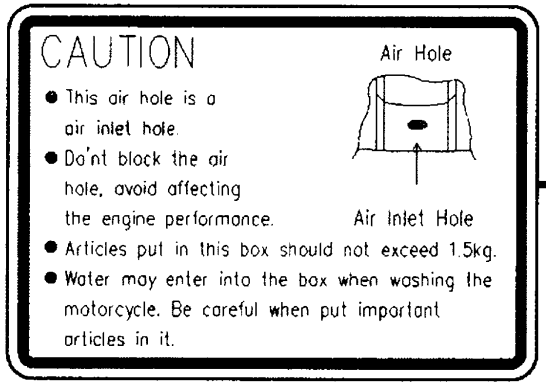

680

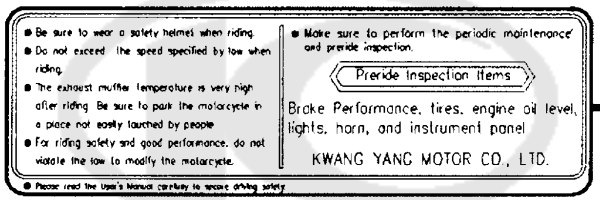

681

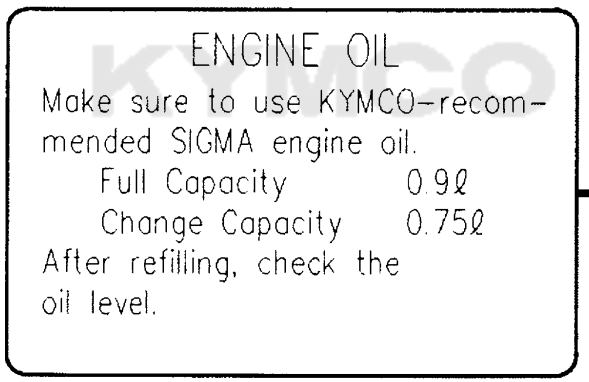

682

Sales mark	Ref no	Part no	Description	Reg description	Regd no
**	680	81218-GFY6-E00	LABEL AIR DUCT CAUTION	LABEL AIR DUCT CAUTION	1
**	682	87541-GFY6-E00	LABEL OIL CAP	LABEL OIL CAP	1
**	681	87560-GFY6-E00	MARK DRIVE CAUTION	MARK DRIVE CAUTION	1

KYMCO

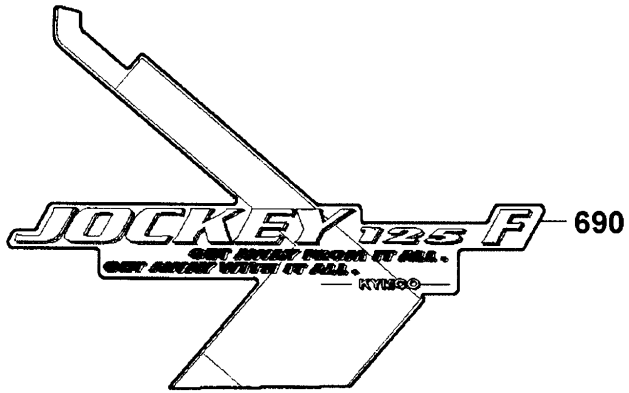

690

691

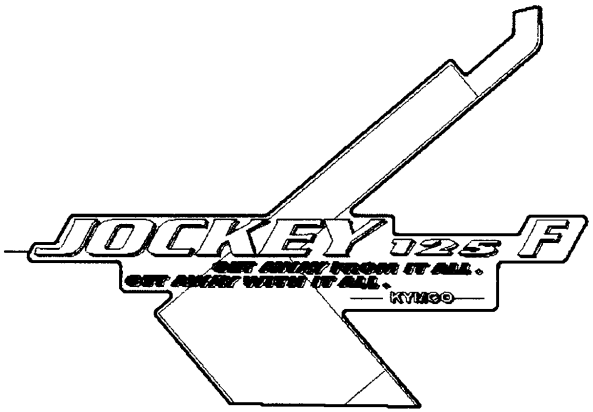

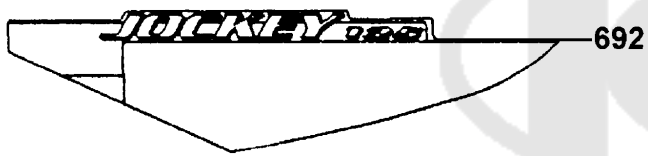

692

693

695

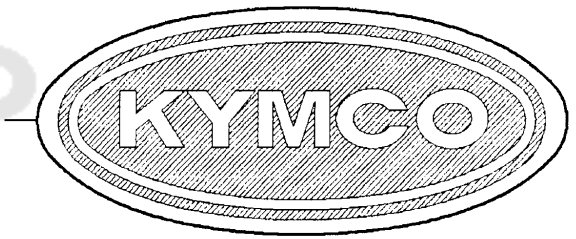

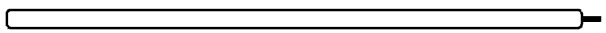

699

KYMCO

696

697

JOCKEY 125 F

Sales mark	Ref no	Part no	Description	Reg description	Regd no
**	696	83550-GFY6-C00	MARK KYMCO	MARK KYMCO	1
**	692	87115-KFLF-C30	STRIPE R FR COVER	STRIPE R FR COVER	1
**	693	87116-KFLF-C30	STRIPE R FR COVER	STRIPE R FR COVER	1
**	690	87131-KFLF-C30	STRIPE R BODY COVER	STRIPE R BODY COVER	1
**	691	87132-KFLF-C30	STRIPE L BODY COVER	STRIPE L BODY COVER	1
**	695	87206-KNCN-800	EMB FR COVER	EMB FR COVER	1
**	697	87231-KFLF-C30	EMB BODY COVER	EMB BODY COVER	2
**	699	87558-GFY6-901	STRIPE RR SIDE MOLDING	STRIPE RR SIDE MOLDING	2

KYMCO